The art of cooling >

Off Highway 2016

Search for more: www.nrf.eu

Radiators
Condensers
Receiver Driers
Compressors
Evaporators
Universal AC parts

www.nrf.eu

Advantages of the NRF online catalogue >

For all:

- Latest application data
- Xref to OE and AM brands
- Your access to the completest Cooling & Airco program

For registered users:

- Online availability & Price checks
- Online order status information
- Quick ordering solutions

Off Highway 2016

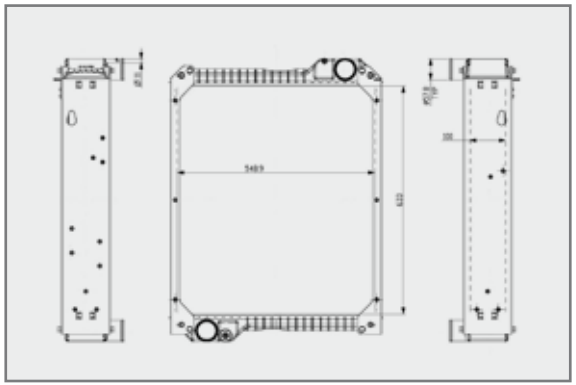

1. Radiators

Radiateuren / Wasserkühler / Radiateurs / Radiadores / Radiadores / Radiatori / Chłodnice / Радиаторы

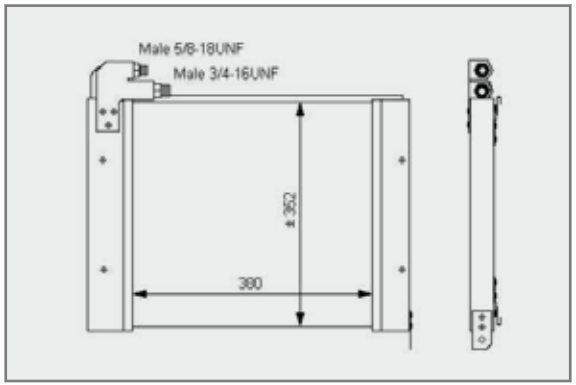

2. Condensers

Condensers / Kondensatoren / Condenseurs / Condensadores / Condensadores / Condensatori / Skraplacze / Конденсоры

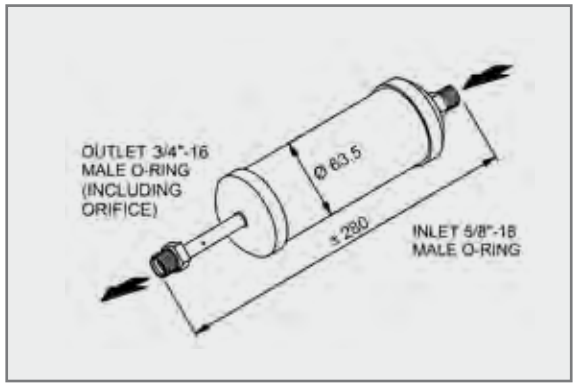

3. Receiver Driers

Drogers / Trockner / Bouteilles déshydratantes / Filtros / Filtros desidratantes / Filtri / Osuszacze / Приемник - осушители

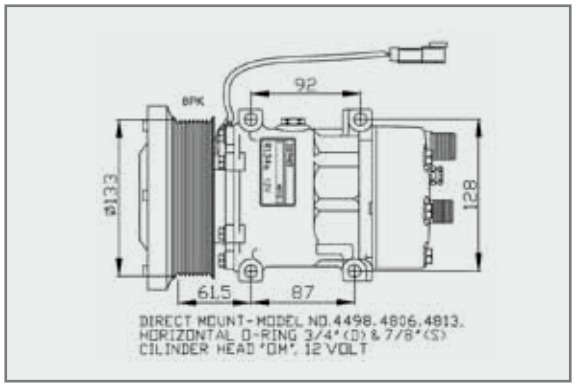

4. Compressors

Compressoren / Kompressoren / Compresseurs / Compresores / Compressores / Compressori / Kompresory / Компрессоры

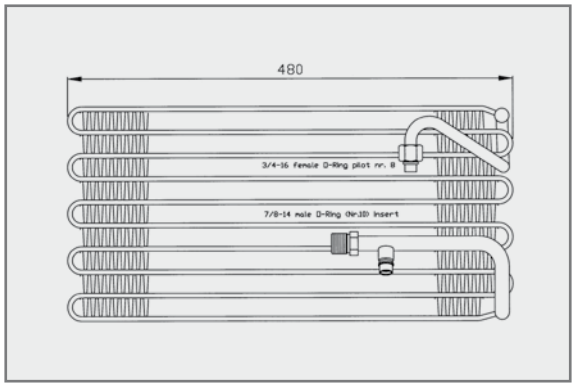

5. Evaporators

Verdampers / Verdampfer / Evaporateurs / Evaporadores / Evaporadores / Evaporatori / Parowniki / Испарители

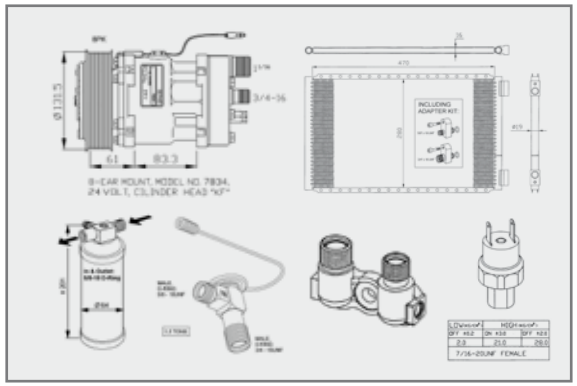

6. Universal AC parts

Universele AC onderdelen / Universale Klimateile / Universel - Pièces climatisation / Peças universais AC / Piezas universales de aire acondicionado / Ricambi AC universali / Uniwersalne części ac / Универсальные части для кондиционирования

Contents / Inhoud / Inhalt / Contenu / Index / Índice / Contenuto / Zawartość / Инхуд

	1	2	3	4	5	6
GB	Radiators	Condensers	Receiver Driers	Compressors	Evaporators	Universal AC parts
NL	Radiateuren	Condensers	Drogers	Compressoren	Verdampers	Universele AC onderdelen
DE	Wasserkühler	Kondensatoren	Trockner	Kompressoren	Verdampfer	Universale Klimateile
FR	Radiateurs	Condenseurs	Bouteilles déshydratantes	Compresseurs	Evaporateurs	Universel - Pièces climatisation
SP	Radiadores	Condensadores	Filtros	Compresores	Evaporadores	Piezas universales de aire acondicionado
PT	Radiadores	Condensadores	Filtros desidratantes	Compressores	Evaporadores	Peças universais AC
IT	Radiatori	Condensatori	Filtri	Compressori	Evaporatori	Ricambi AC universali
PL	Chłodnice	Skraplacze	Osuszacze	Sprężarki	Parowniki	Uniwersalne części ac
RU	Радиаторы	Конденсоры	Приемник - осушители	Компрессоры	Испарители	Универсальные части для кондиционирования
Page	4 - 32	33 - 36	37 - 41	42 - 55	56 - 58	59 - 77

Radiators / Radiateuren / Wasserkühler / Radiateurs / Radiadores / Radiadores / Radiatori / Chłodnice / Радиаторы

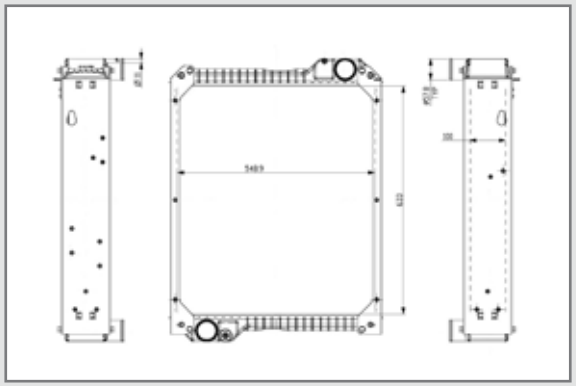

1. Radiators

Radiateuren / Wasserkühler / Radiateurs / Radiadores / Radiadores / Radiatori / Chłodnice / Радиаторы

Make		OE #	System	A x B x C	NRF #	
CASE IH						
CASE IH	323, 353, 383, 423, 453	3131579R91	Cu / Ms	357x390x46	52177	
CASE IH	4210, 4230, 4240 (from ser.nr. JJE910720-) and 3220, 3230 from ser.nr. 11070000	136856A1	Alu / PTR	490x436x100	54078	**NEW**
CASE IH	433, 523, 533, 533E, 533V, 540, 633, 633E, 633V, 640	3148115R93, 3148115R94, 3223389R91	Cu / Ms	388x470x46	52159	
CASE IH	433, 740, 833E, 833V	3233229R91, 3233229R92, 1328723C91, 1328723C92	Cu / Ms	390x470x59	52172	
CASE IH	5120, 5120 MAXXUM, 5130, 5130 MAXXUM, 5140, 5140 MAXXUM, 5150, 5220 MAXXUM, 5230 MAXXUM, 5240 MAXXUM, 5250 MAXXUM	104753A1, 104753A2	Cu / Ms	490x500x59	52104	
CASE IH	644, 743, 744, 744, 745S, 844, 844S, 845	3216849R92	Cu / Ms	390x500x71	53657	
CASE IH	7110, 7120, 7130, 7140, 7150, 7210, 7220, 7230, 7240, 7250 (ALL MAGNUM SERIES)	A190663	Cu / Ms	665x697x76	52130	
CASE IH	7150, 7250	A190807	Cu / Ms	667x700x104	53658	
CASE IH	743XL, 744XL, 745XL, 844XL, 845XL, 856XL	3399930R1	Cu / Ms	380x510x77	52153	
CASE IH	955XL, 956, 956XL, 1055XL, 1056, 1056XL	3399812R1	Cu / Ms	490x512x59	52168	
CASE IH	CVX120, CVX130, CVX150, CVX170	162000530101 / 47107872 / 47107890	Alu / PTR	633x549x100	54075	**NEW**
CASE IH	CX90, CX100, MX80C, MX90C, MX100C	239979A3, 239979A2, 303496A2	Alu / PTR	538x436x100	54070	**NEW**
CASE IH	FARMALL 105A, FARMALL 115A	84515498	Alu / PTR	500x538x73	54090	**NEW**
CASE IH	FARMALL JX75, FARMALL JX80, FARMALL JX90, FARMALL 65A, FARMALL 75A	84519000	Alu / PTR	500x538x73	54091	**NEW**
CASE IH	FARMALL JX85, FARMALL JX95, FARMALL 85A, FARMALL 95A	84519001	Alu / PTR	500x538x73	54092	**NEW**
CASE IH	JX60, JX70, JX80, JX90, JX95	84175586, 87681422, 84250074	Alu / PTR	460x539x62	54069	**NEW**
CASE IH	JX60, JX70, JX80, JX90, JX95	84172100, 5099122	Alu / PTR	460x539x62	54089	**NEW**
CASE IH	Maxxum 110, 115, 120, 125, 130, 140	87574213, 84485111, 87574206, 84485110	Alu / PTR	595x526x122	54082	**NEW**
CASE IH	MX100, MX110, MX120, MX135, MX150	135691A3, 135690A3	Alu / PTR	571x549x100	54077	**NEW**
CASE IH	MXM155, MXM140	87352191, 82033791	Alu / PTR	595x526x122	54079	**NEW**
CASE IH	MXM175, MXM190	87352193, 82033792	Alu / PTR	705x526x122	54080	**NEW**
CASE IH	MXU100, MXU110 (serial from ACP246299), MXU115, MXU135 (start serial ACP246484), MXU115, MXU125, MXU135 (serial range D4827-ACP246483), MXU115, MXU125, MXU135 (to serial C4827)	87306757, 87306756, 82033796, 82033774, 82027546	Alu / PTR	595x526x122	54081	**NEW**
CLAAS						
CLAAS	ARES	7700055181	Cu / PTR	541x502x78	50494	
CLAAS	ARES 600	7700065582, 10557011	Cu / Ms	633x537x100	54097	**NEW**
CLAAS	ARES 800	7700058547	Cu / Ms	626x647x100	54093	**NEW**
CLAAS	ARES 800	7700068308	Cu / Ms	626x647x100	54094	**NEW**
CLAAS	CELTIS	7700060911, 7700060775	Cu / Ms	510x528x100	54095	**NEW**
CLAAS	CELTIS	7700060912, 7700065776	Cu / Ms	570x528x100	54096	**NEW**
CLAAS	CERES	7700056938	Cu / PTR	490x481x58	50498	
CLAAS	CERES	7700059907	Cu / PTR	490x479x78	50499	
CLAAS	CERES, CERGOS, ERGOS	7700047576	Cu / PTR	490x481x78	50491	
DEUTZ						
DEUTZ	1012 engine, Agrotron 80, Agrotron 85, Agrotron 90, Agrotron 100, Agrotron 105, Agrotron 106, Agrotron 110, Agrotron 115	04423682EB, 04438383	Alu / PTR	412x475x58	50472	

Make		OE #	System	A x B x C	NRF #	
DEUTZ						
DEUTZ	1013 engine, Agrotron 90, Agrotron 100, Agrotron 105, Agrotron 110, Agrotron 115, Agrotron 120, Agrotron 135, Agrotron 150	04411151EB, 04438384	Alu / PTR	470x475x78	50473	
FENDT						
FENDT	FARMER 304, 305, 307, 308, 309	G186207050010	Cu / PTR	479x470x72	504366	
FENDT	FARMER 307, FARMER 308, FARMER 309	G117200050200	Cu / PTR	480x478x62	503364	**NEW**
FENDT	FARMER 310 / 311 / 312, FAVORIT 509C / 510 / 511	G199204050010	Cu / PTR	520x478x62	523373	
FENDT	FARMER 311 /312, FAVORIT 511 / 512	G31220050010	Cu / PTR	605x470x72	504530	
FIAT						
FIAT	450, 480, 540, 605C1	4973345, 4952983	Cu / Ms	450x460x59	53662	
FIAT	605, 640, 60.90, 670	5153481, 5159615	Cu / Ms	450x460x59	53663	
FIAT	680, 740, 780, serie 70.80, 80.90	5159617, 4997175	Cu / Ms	500x545x59	53664	
FORD						
FORD	2000, 2310, 2600, 2610, 2910, 3000, 3600, 3610, 3910, 4000, 4100, 4110, 4600, 4610	81875325	Cu / Ms	410x450x59	53659	
FORD	5000, 5600, 6600	81817280	Cu / Ms	450x450x59	53660	
FORD	5610, 6610	81829492	Cu / Ms	460x460x76	53661	
JCB						
JCB	214, 215, 217, 3CN, 3CX, 4C, 4CN, 4CX, TLT30D, TLT35D	30/925627	Alu / PTR	470x620x105	54068	**NEW**
JCB	3CX	923/02900	Cu / Ms	440x460x79	52169	
JCB	3CX, 4CX and others	30/915200, 30/926286, 30/926671	Alu / PTR	505x620x105	52167	
JCB	3CX, 4CX and others (assembly of radiator and oilcooler)	128/14326	Alu / PTR	505x620x105	52195	
JCB	3CX, 4CX and others (oilcooler)	30/925615	Alu	560x558x50	31185	
JCB	530, 535, 540	30/925545	Alu / PTR	571x563x100	58594	**NEW**
John Deere						
John Deere	1550, 1750, 1850, 1850N, 1950, 1950N, 1850F, 1950F	AL67563, AL59532	Cu / PTR	430x478x62	503342	
John Deere	1630, 1635, 1830, 2020, 2120,2030, 2130	AL25255, AT20847	Cu / Ms	510x350x76	52163	
John Deere	1640, 1840, 2040, 2140	AL31237, AL37568	Cu / Ms	520x480x76	52243	
John Deere	2250, 2450, 2650, 2850, 2855N, 2355, 2555, 2755, 2650N	AL56372	Cu / Ms	530x460x79	52253	
John Deere	2450, 2650, 2850	AL66774, AL64324	Cu / PTR	510x478x62	503341	
John Deere	2955, 3050, 3150, 3350, 3650(664560>)	AL64323, AL66766	Cu / PTR	608x478x62	503340	
John Deere	300, 301, 820, 830, 1130	AT20849	Cu / Ms	425x350x76	52248	
John Deere	940, 1040, 1140, 1750, 1850	AL39290	Cu / Ms	475x348x75	52138	
John Deere	6800, 6900, 6506, 6600 (EU models), 6510, 6610, 6810, 6910, 6910S, 6510SE, 6610SE (EU models), 6605, 7405 (North American models)	AL115003, AL115004, AL110419, AL111000, AL111629, AL111639, AL79036, AL118571, AL118572, AL115730	Alu / PTR	576x503x77	50585	**New aluminium core!**
John Deere	6100, 6200, 6300, 6400, 6100SE, 6200SE, 6300SE, 6400SE (EU models) 6200, 6300, 6400, 6500, 6200L, 6300L, 6400L, 6500L (North American models) 6010, 6110, 6210, 6310, 6410, 6010SE, 6110SE, 6210SE, 6310SE, 6410SE (EU models) 6110, 6210, 6310, 6410, 6405, 6110L, 6210L, 6310L, 6410L, 6510L, 6310S, 6410S, 6510S (North American models)	AL115002, AL115731, AL115732, AL110865, AL110996, AL116668, AL78001, AL78003	Alu / PTR	516x503x77	50584	**New aluminium core!**

Make		OE #	System	A x B x C	NRF #	
John Deere						
John Deere	6020, 6120, 6220, 6320, 6420, 6520, 6215, 6415, 6515	AL157248 (4 cylinder), AL156285 / AL157246 / AL157248 / AL163359 / AL164429 / AL164431 / AL171542 / AL176361	Alu / PTR	503x547x132	54109	**NEW**
John Deere	6520, 6620, 6820, 6920	AL157249 (6 cylinder), AL157247 / AL157249 / AL160276 / AL161426 / AL163360 / AL164432 / AL168727 / AL 171543 / AL176362	Alu / PTR	563x547x132	54110	**NEW**
Kubota						
Kubota	JLG Lift, Various models		Cu / Ms	530x490x62	54106	**NEW**
Kubota	L30/40 HST, Various models		Cu / Ms	450x450x35	54108	**NEW**
Kubota	L4310D, Various models	V2203-AN3456	Cu / Ms	350x450x35	54107	**NEW**
Kubota	V2203M, Various models	1G94272001, 1K583-72061	Cu / Ms	425x495x62	54103	**NEW**
Kubota	V3307DI-T, Various models		Cu / Ms	485x490x62	54104	**NEW**
Kubota	Various models		Cu / Ms	380x420x55	54105	**NEW**
Kubota	Various models	16625-72060	Cu / Ms	350x418x49	55352	
Kubota	VT3600T, Various models	3A151-17101	Cu / Ms	485x490x62	54102	**NEW**
Massey Ferguson						
Massey Ferguson	135	1660499M92	Cu / Ms	470x385x59	52145	
Massey Ferguson	154, 174, 184, 194, 233, 234S, 253, 254, 254S, 273, 274, 274S, 283, 284S, 293, 294S	1824627M91, 1824627M93	Cu / Ms	445x455x59	52208	
Massey Ferguson	165 (and industrial 50 and 50B)	897358M4, 885411M93, 897357M92	Cu / Ms	490x385x59	501768	
Massey Ferguson	235, 245, 255	1660655M92	Cu / Ms	470x385x59	53656	
Massey Ferguson	3050, 3060, 3065, 6110, 6120, 6130, 6140 (from serial -B246029)	3618630M92	Cu / Ms	465x530x57	52181	
Massey Ferguson	3070, 3075, 3785, 3095, 3115, 3120, 6150, 6160, 6170, 6180, 3120T	3618628M92	Cu / Ms	505x530x59	52179	
Massey Ferguson	35	894319M2, 894319M92	Cu / Ms	430x385x59	53654	
Massey Ferguson	365, 375, 390, 398, 399	1695721M2	Cu / Ms	498x500x76	53655	
Massey Ferguson	4260, 4270, 4360, 4370, 4265, 4365, 4225, 4235, 4240, 4245, 4255, 4325, 4335, 4345, 4355, 5335, 5340, 5355, 5360, 6265, 6270, 6280, 6290	3808159M3, 3808158M3, 3810188M92, 3781116M1	Alu / PTR	548x526x100	54085	**NEW**
Massey Ferguson	50E, 50EX, 275, 290, 575, 675, 690	1669650M94, 1660654M92	Cu / Ms	483x380x59	58408	
Massey Ferguson	5425, 5435, 5445, 6235, 6245, 6445	3781114M1	Alu / PTR	548x526x100	54072	**NEW**
Massey Ferguson	5455, 6255, 6455, 6260	3781115M1	Alu / PTR	548x526x100	54073	**NEW**
Massey Ferguson	6495, 7485, 7490, 7495, 6485, 6490, 6495	3785214M2, 4271433M2	Alu / PTR	688x526x100	54074	**NEW**
Massey Ferguson	6497, 6499, 8210, 8220, 8250	3780221M4, 3780221M5	Alu / PTR	633x616x100	54076	**NEW**
Massey Ferguson	7465, 7475, 7480, 5470, 5460, 5465, 6460, 6465, 6470, 6475, 6480	3785830M2, 3787420M2	Alu / PTR	568x526x100	54071	**NEW**
Massey Ferguson	MF265, 275, 285, 30D, 565	1669648M94	Cu / Ms	490x395x59	52161	
Mercedes Unimog						
Mercedes Unimog	U100, U100T, U110T, U1100T, U1150, U1150L, U125, U1100L, U72, U80, U800L, U900	4165000603	Cu / Ms	510x475x55	58406	
Mercedes Unimog	U1200, U1300, U1400, U1450, U1500, U1700, U1700L	4255000603, 4255000703, 4275010601, 4355000203, 4365000400, 4365000500, 4365007000	Cu / Ms	482x598x46	53714	

Make		OE #	System	A x B x C	NRF #	
New Holland						
New Holland	F480, TD3.50	84382117	Alu / PTR	405x451x85	54100	**NEW**
New Holland	T3.50F, T3.55F, T3.65F, T3.75F	47370572	Alu / PTR	405x419x85	54098	**NEW**
New Holland	T6020, T6040, T6050, T6060, T6070, T6.120, T6.140, T6.150, T6.155, T6.160	87574213, 84485111, 87574206, 84485110	Alu / PTR	595x526x122	54082	**NEW**
New Holland	TD 85 D, TD 85 DT, TD 95 D, TD 95 DT	5096595	Cu / Ms	465x540x76	58405	
New Holland	TD4020F, TD4030F, TD4040F	84221364	Alu / PTR	410x538x73	54099	**NEW**
New Holland	TD5.105, TD5.115	84515498	Alu / PTR	500x538x73	54090	**NEW**
New Holland	TD5.65, TD5.75, TD5.80, TD5.90	84519000	Alu / PTR	500x538x73	54091	**NEW**
New Holland	TD5.85, TD5.95	84519001	Alu / PTR	500x538x73	54092	**NEW**
New Holland	TD5010, TD5020, TD5030, TD5040, TD5050	84175586, 87681422, 84250074	Alu / PTR	460x539x62	54069	**NEW**
New Holland	TD60D, TD70D, TD80D, TD90D, TD95D	84172100, 5099122	Alu / PTR	460x539x62	54089	**NEW**
New Holland	TD65B, TT65D	5094695	Cu / Ms	425x450x77	54101	**NEW**
New Holland	TM115, TM125	82013306	Cu / Ms	633x523x97	52106	
New Holland	TM140, TM155 (start serial ACM256706)	87352191, 82033791	Alu / PTR	595x526x122	54079	**NEW**
New Holland	TM150, TM165	82013307	Cu / Ms	633x523x97	52107	
New Holland	TM175, TM190 (start serial ACM256706)	87352193, 82033792	Alu / PTR	705x526x122	54080	**NEW**
New Holland	TS100A, TS110A, TS115A, TS135A (start serial ACP246042), TS115A, TS125A, TS135A (serial range ACP223263-ACP246483)	87306757, 87306756, 82033796, 82033774, 82027546	Alu / PTR	595x526x122	54081	**NEW**
Renault						
Renault	ARES	7700049957	Cu / PTR	516x502x78	50492	
Renault	CERES 65 S/V, CERES 75 S/V	7700047575	Cu / PTR	435x481x58	50490	
Renault	CERES 85 S/V	7700047574	Cu / PTR	435x481x78	50489	
Renault	CERES 95 S/V	7700047576	Cu / PTR	490x481x78	50491	
Renault	ET 60 Fase II C/V	7700056938	Cu / PTR	490x481x58	50498	
Renault	ET 60 Powertech S/V, ET 69 Powertech S/V	7700059907	Cu / PTR	490x479x78	50499	
Renault	ET 72 S/V	7700055181	Cu / PTR	541x502x78	50494	
Renault	ET 76 S/V, ET 82 S/V	7700055180	Cu / PTR	637x502x78	50495	
Steyr						
Steyr	4100 Profi, 4115 Profi, 6115, 6125, 6135	87306757, 87306756, 82033796, 82033774, 82027546	Alu / PTR	595x526x122	54081	**NEW**
Steyr	4110 Profi, 4120 Profi, 4130 Profi, 6115 Profi, 6125 Profi, 6140 Profi	87574213, 84485111, 87574206, 84485110	Alu / PTR	595x526x122	54082	**NEW**
Steyr	CVT120, CVT130, CVT150, CVT170	162000530101, 47107872, 47107890	Alu / PTR	633x549x100	54075	**NEW**
Steyr	T80, 84	184530004, 530004	Cu / Ms	405x365x44	54028	
Terex / Fermec						
Terex / Fermec	Backhoe loaders 640, 650, 660, 860, 960, 965, 750, 760 and others	6193297M91	Alu / PTR	470x520x105	52193	
Zetor						
Zetor	7340, 7320	72011314	Cu / Ms	400x412x55	58407	

Make	*Forklift radiators*	OE #	System	A x B x C	NRF #	
Caterpillar						
Caterpillar	GP/DP 15N/18N/20N/25N/30N/35N	91E01-00010, 12103-30000, C1210330000	Cu / PTR	450x469x53	507567	**NEW**
Hyster						
Hyster	H177 XM	8516828, 2054530, 580035305	Alu / PTR	475x427x48	52301	
Hyster	H177, D177 XM	8504627, 1736545	Alu / PTR	481x427x58	52298	
Hyster / Yale	D010 XM	8508901, 2043720, 580021191	Alu / PTR	426x427x48	52300	
Jungheinrich						
J / S / B*	DFG/TFG 425-435, CD/CL 25C-35C	52005091	Bar Plate / Alu	650x367x97	52192	
J / S / B*	DFG/TFG 16-20, CD/CL 16-20, DFG/TFG 316, 320	50219790, 50425718	Cu / Ms	415x437x85	55311	
J / S / B*	DFG/TFG 20-30, CD/CL 22-33, DFG/TFG 420S, 425S, 430S	50219079, 50425717	Cu / Ms	500x517x85	55312	
J / S / B*	DFG/TFG 40-50, CD/CL 40-50, DFG/TFG 540-550(S)	50220146, 50430353	Cu / Ms	513x437x85	55313	
Linde						
Linde	320 H50/60/70/80	3200760111	Bar Plate / Alu	309x147x160	910078	**NEW**
Linde	350-03 H12/16/18/20	3501070550	Bar Plate / Alu	530x349x80	910071	**NEW**
Linde	351-03 H20/25/35	3511070504	Bar Plate / Alu	502x399x64	910070	**NEW**
Linde	352-01/352-02 H35/40/45	3521070500	Bar Plate / Alu	580x503x97	910077	**NEW**
Linde	352-04 H35/40/45	3521070510, 3521070511	Bar Plate / Alu	580x503x97	910072	**NEW**
Linde	392-01 H20/25	3921070503, 3921070502, 3921070501	Bar Plate / Alu	550x461x64	910073	**NEW**
Linde	393-01 H30/35	3931070508	Bar Plate / Alu	554x462x97	910074	**NEW**
Linde	394-01 H40/45/50	3941070505	Bar Plate / Alu	700x388x94	910075	**NEW**
Linde	394-01 H40/45/50	3941071000	Bar Plate / Alu	650x121x94	910076	**NEW**
Mitsubishi						
Mitsubishi	FG/FD 15N/18N/20N/25N/30N/35N	91E01-00010, 12103-30000, C1210330000	Cu / PTR	450x469x53	507567	**NEW**
Toyota						
Toyota	7-series 2 - 3,5 Ton	16410-F2101-71, 16420-F2100-71	Alu / PTR	501x427x48	52278A	
Toyota	7-series 1,5 - 1,8 Ton	16410-F1101-71	Alu / PTR	451x438x50	52279A	
Toyota	8-series 2 - 3,5 Ton	16420-F2180-71, 16420-F3180-71	Alu / PTR	500x430x48	52296A	
Toyota	8-series 1,5 - 1,8 Ton	16420-F1180-71	Alu / PTR	451x438x50	52297A	
Yale						
Yale	Forklift	8504628, 1737170	Alu / PTR	481x420x58	52299	
Yale / Hyster	Forklift	8516829, 580035306, 2054531, 2055338	Alu / PTR	475x427x48	52302	

* *Jungheinrich / Steinbock / Boss*

CASE IH

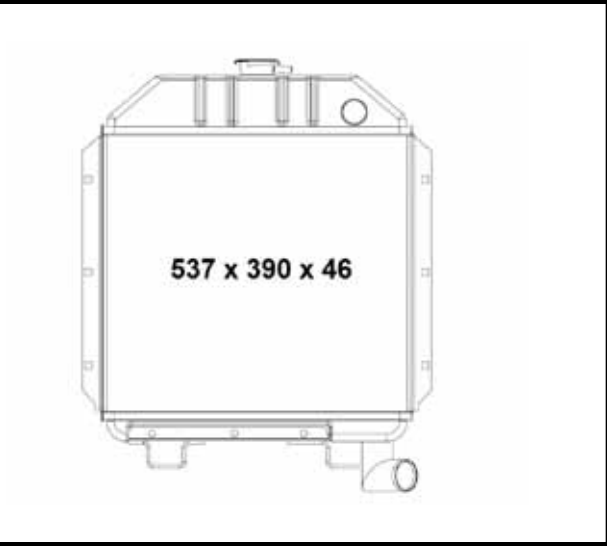

52177 357x390x46

CASE IH **NEW**

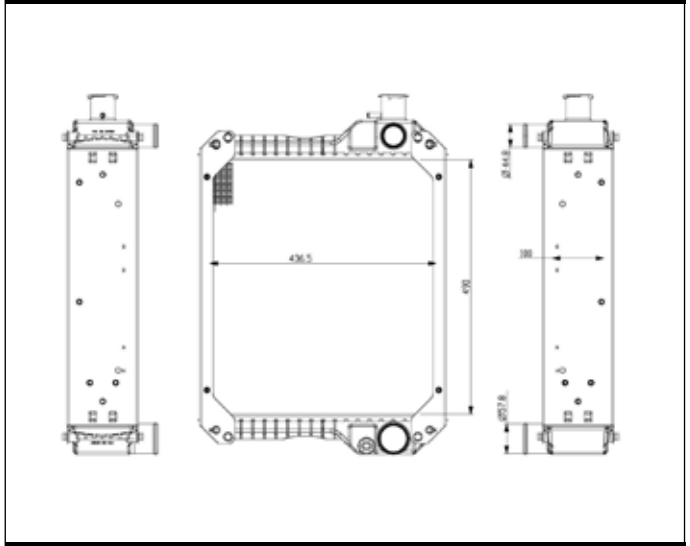

54078 490x436x100

CASE IH

52159 388x470x46

CASE IH

52172 390x470x59

CASE IH

52104 490x500x59

CASE IH

53657 390x500x71

CASE IH

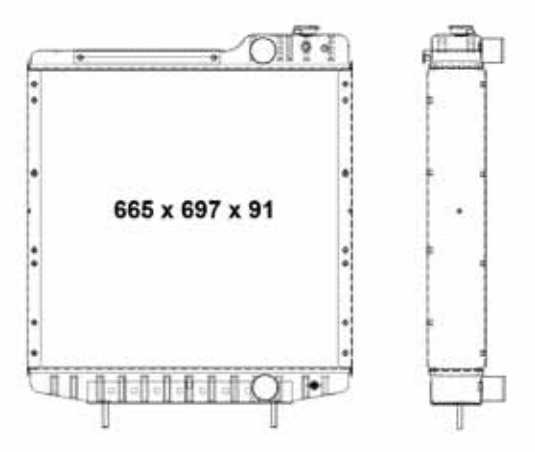

52130 665x697x76

CASE IH

53658 667x700x104

CASE IH

52153 380x510x77

CASE IH

52168 490x512x59

CASE IH **NEW**

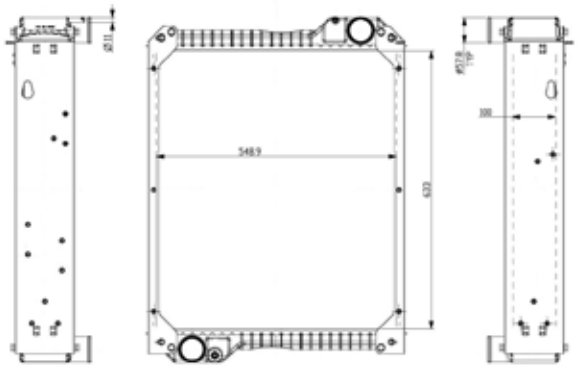

54075 633x549x100

CASE IH **NEW**

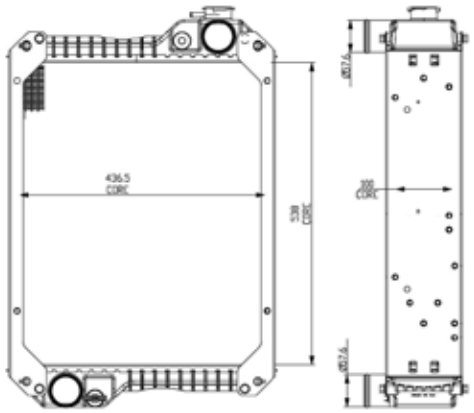

54070 538x436x100

CASE IH **NEW**

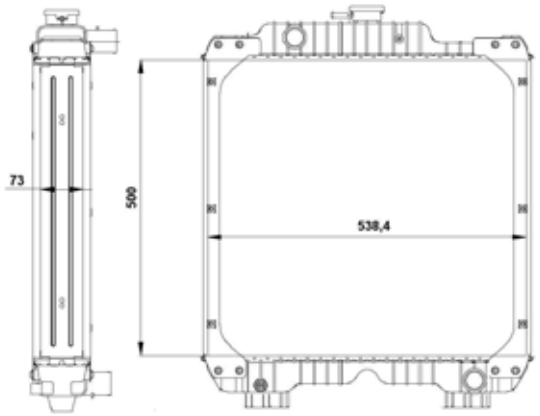

54090 500x538x73

CASE IH **NEW**

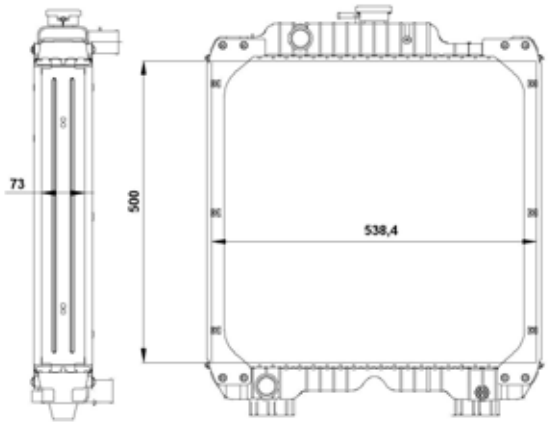

54091 500x538x73

CASE IH **NEW**

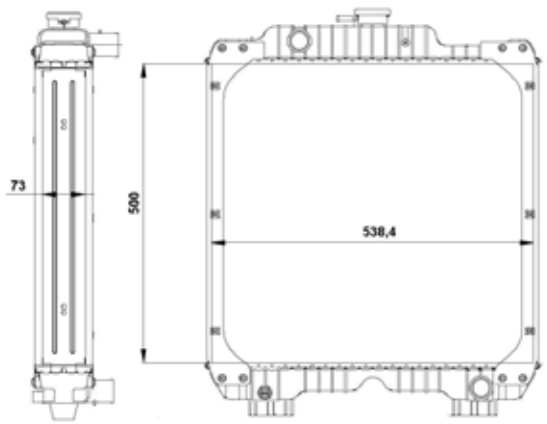

54092 500x538x73

CASE IH **NEW**

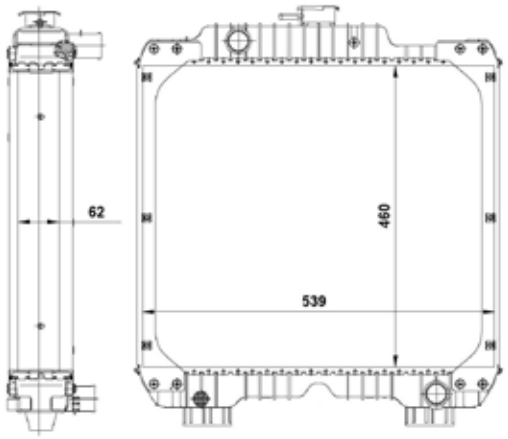

54069 460x539x62

CASE IH **NEW**

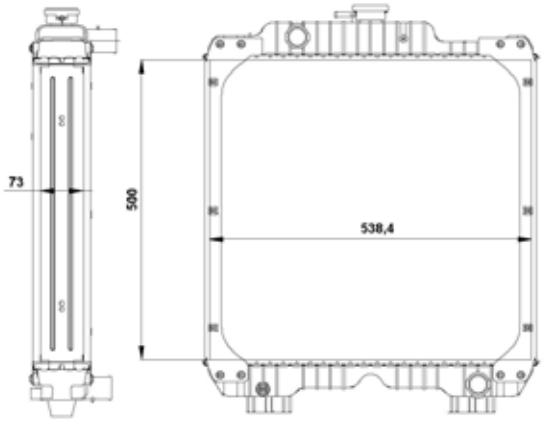

54089 460x539x62

CASE IH **NEW**

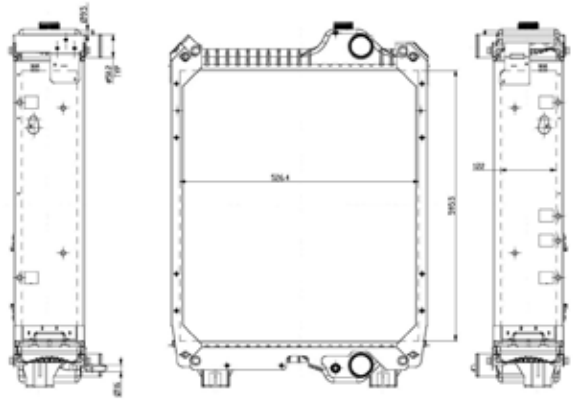

54082 595x526x122

CASE IH **NEW**

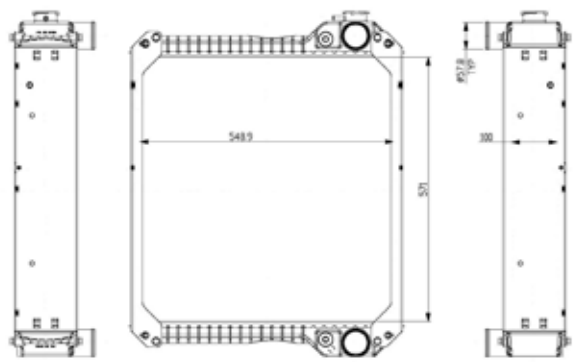

54077 571x549x100

CASE IH **NEW**

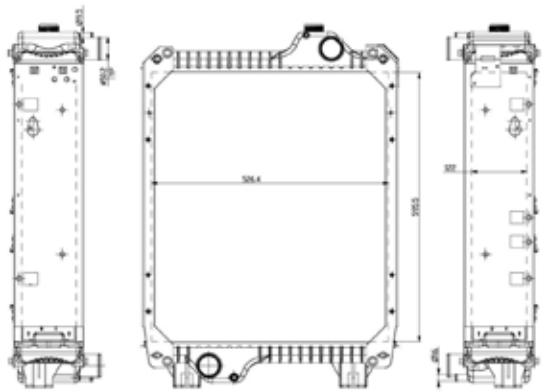

54079 595x526x122

CASE IH **NEW**

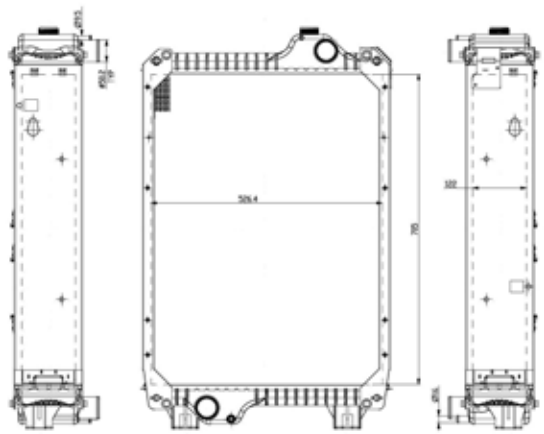

54080 705x526x122

CASE IH **NEW**

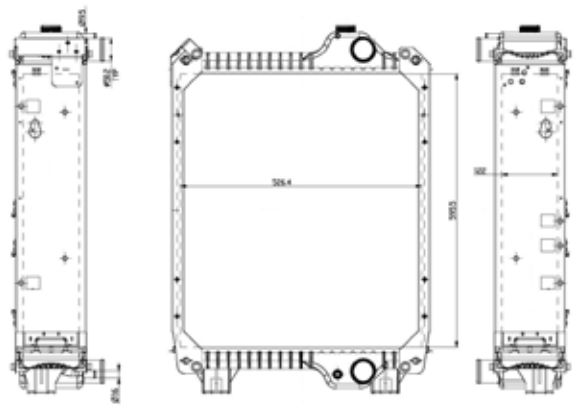

54081 595x526x122

CLAAS

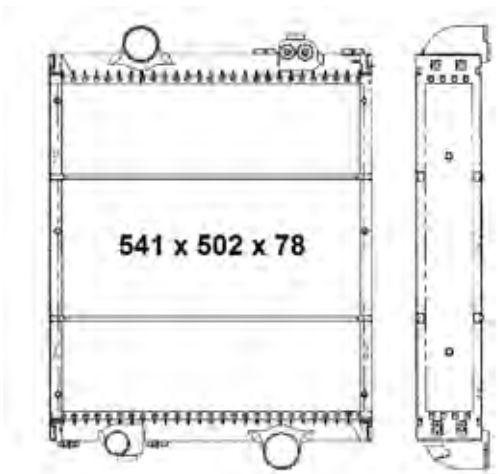

50494 541x502x78

CLAAS **NEW**

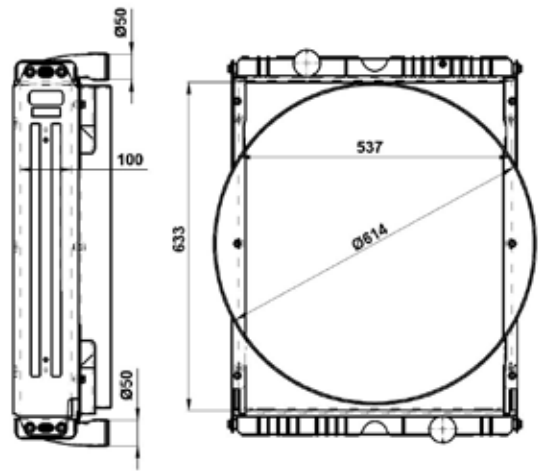

54097 633x537x100

CLAAS **NEW**

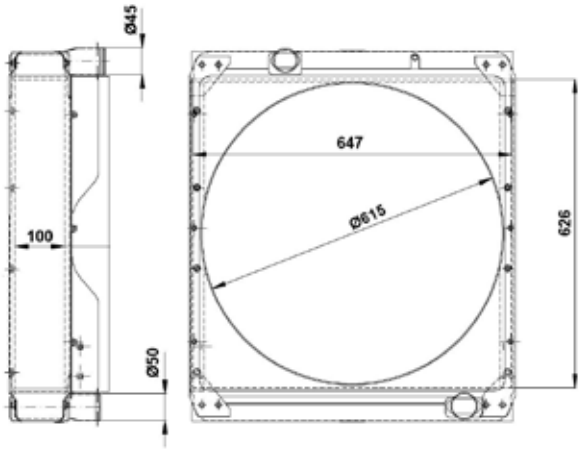

54093 626x647x100

CLAAS **NEW**

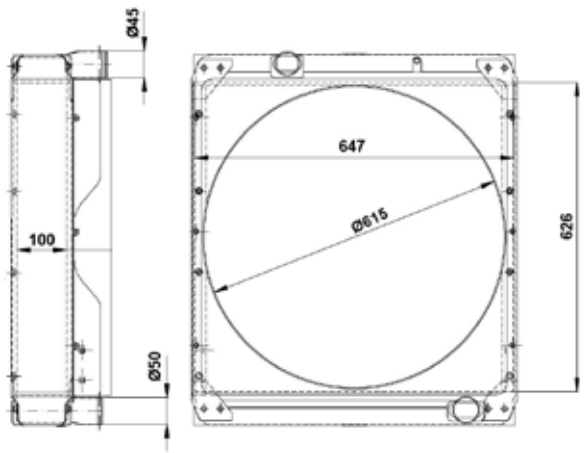

54094 626x647x100

CLAAS **NEW**

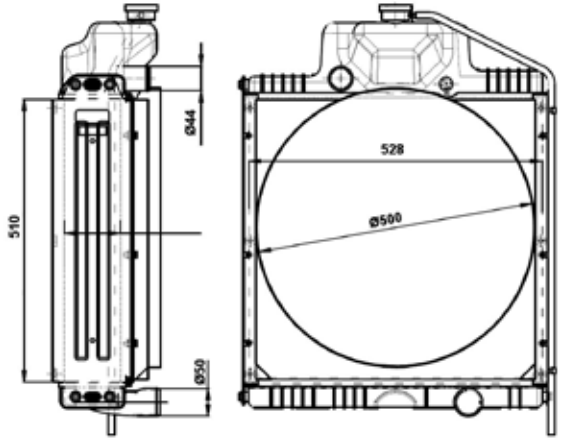

54095 510x528x100

CLAAS **NEW**

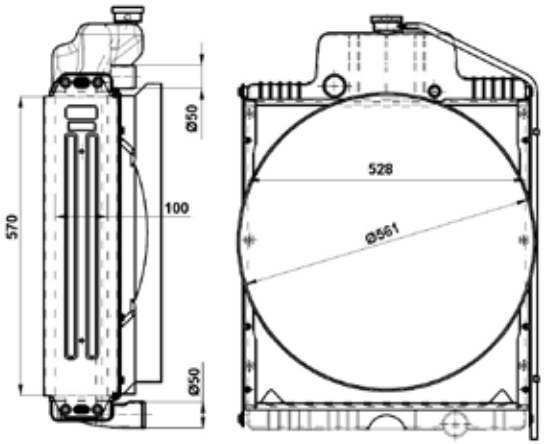

54096 570x528x100

CLAAS

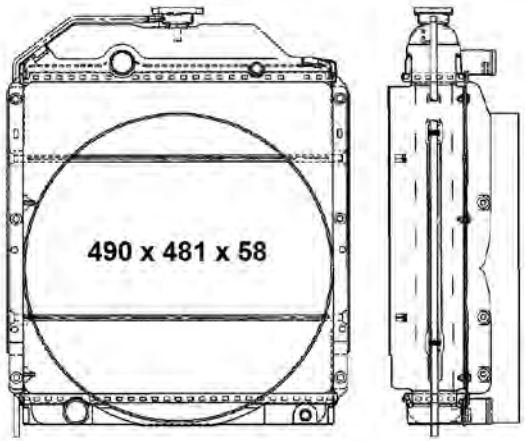

50498 541x502x78

CLAAS

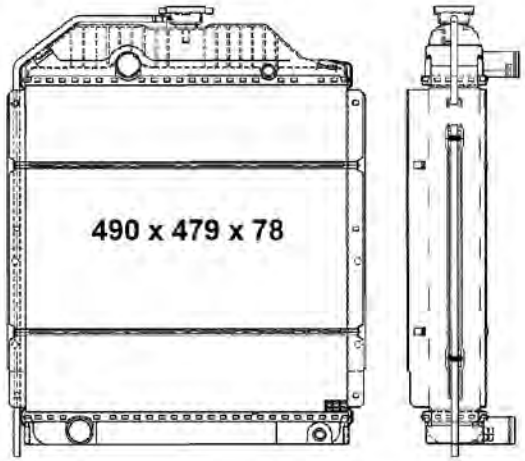

50499 541x502x78

CLAAS

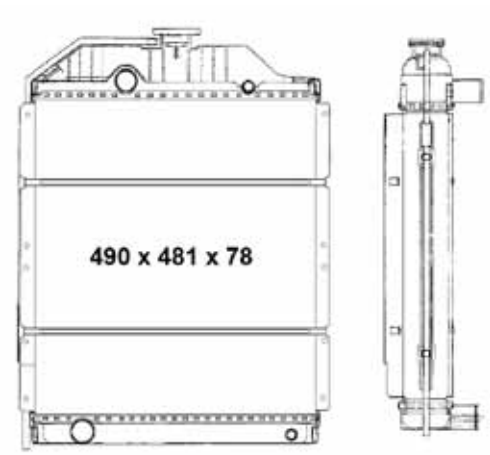

50491 490x481x78

DEUTZ

50472 412x475x58

DEUTZ

50473 470x475x78

FENDT

504366 479x470x72

FENDT **NEW**

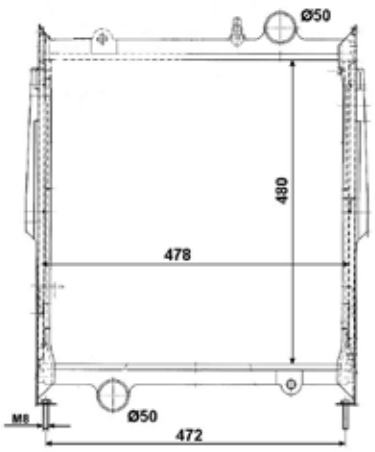

503364 480x478x62

FENDT

523373 520x478x62

FENDT

504530 605x470x72

FIAT

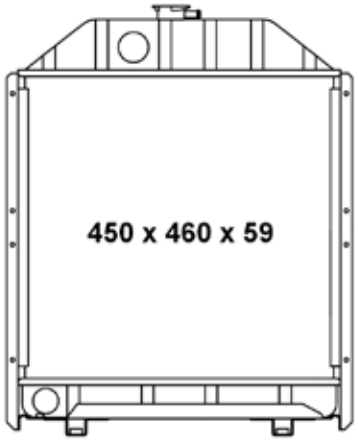

53662 450x460x59

FIAT

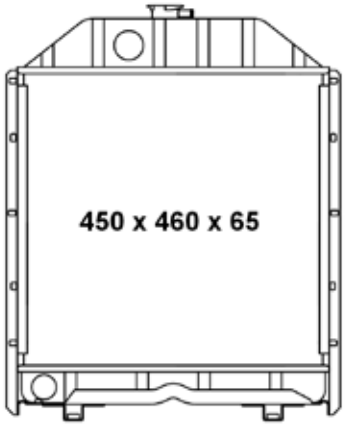

53663 450x460x59

FIAT

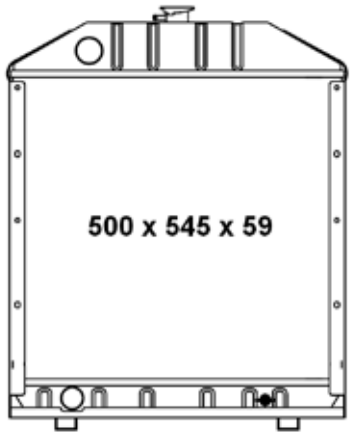

53664 500x545x59

FORD

53659 410x450x59

FORD

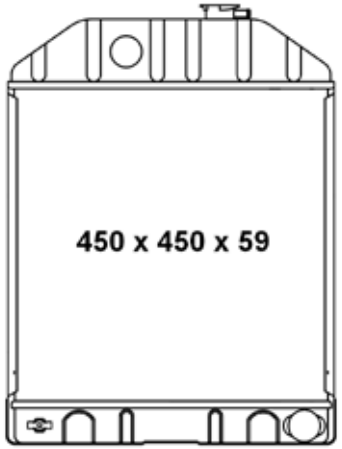

53660 450x450x59

FORD

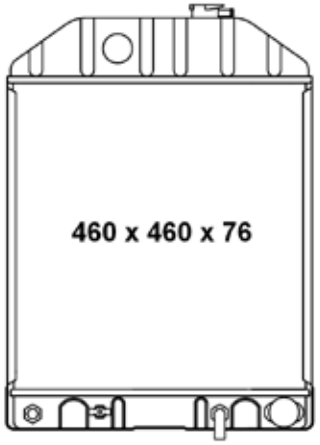

53661 460x460x76

JCB **NEW**

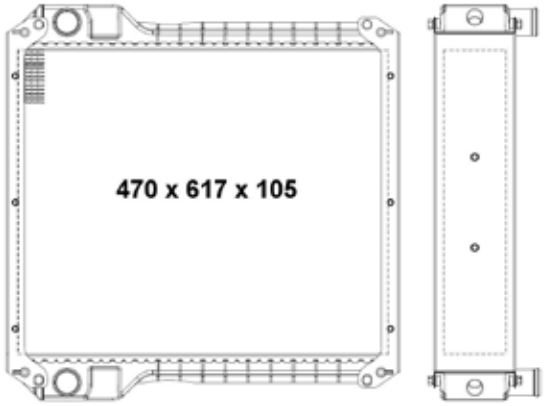

54068 470x620x105

JCB

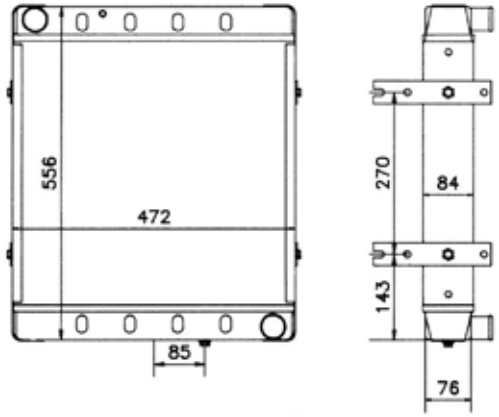

52169 440x460x79

JCB

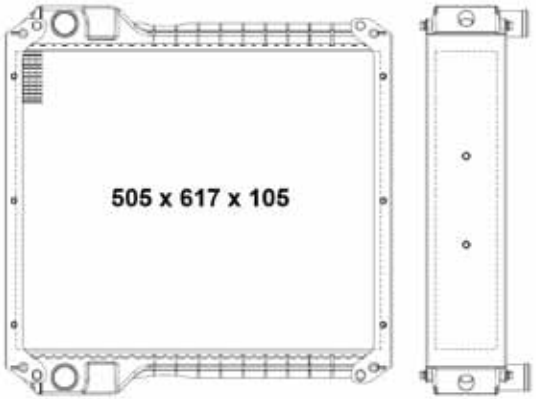

52167 505x620x105

JCB

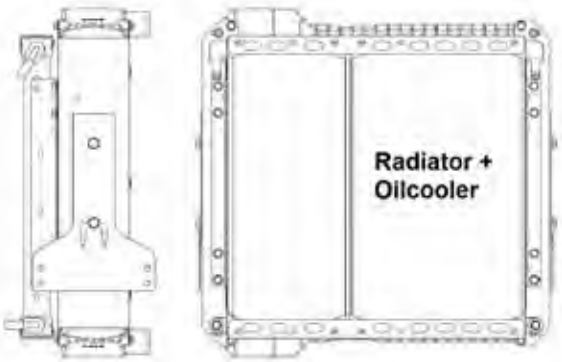

52195 505x620x105

JCB

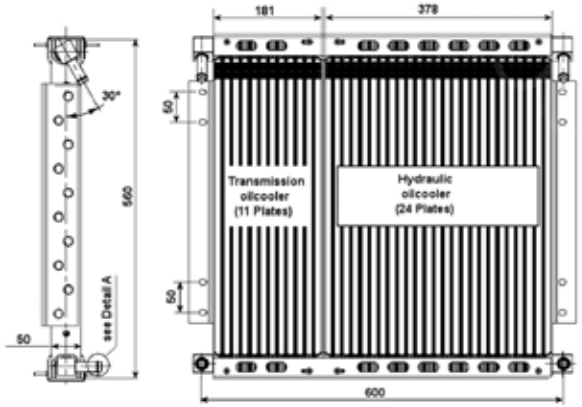

31185 560x558x50

JCB **NEW**

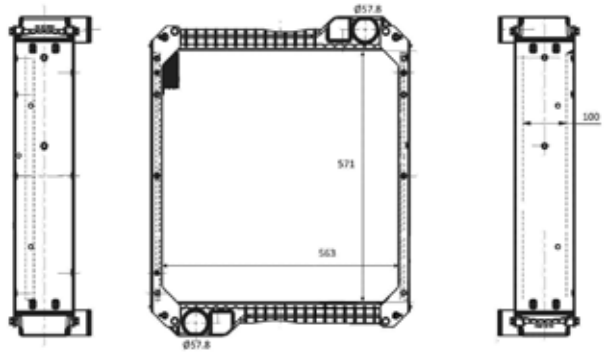

58594 571x563x100

John Deere

503342 430x478x62

John Deere

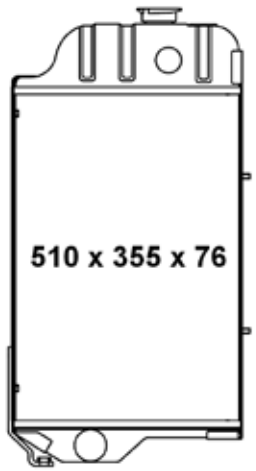

52163 510x350x76

John Deere

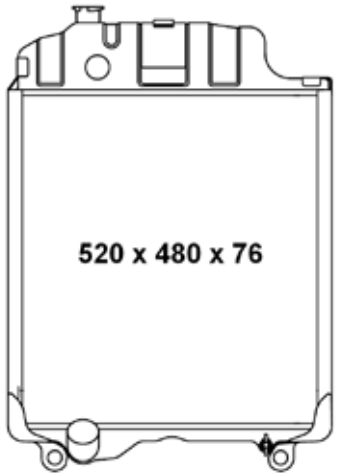

52243 520x480x76

John Deere

52253 530x460x79

John Deere

503341 510x478x62

John Deere

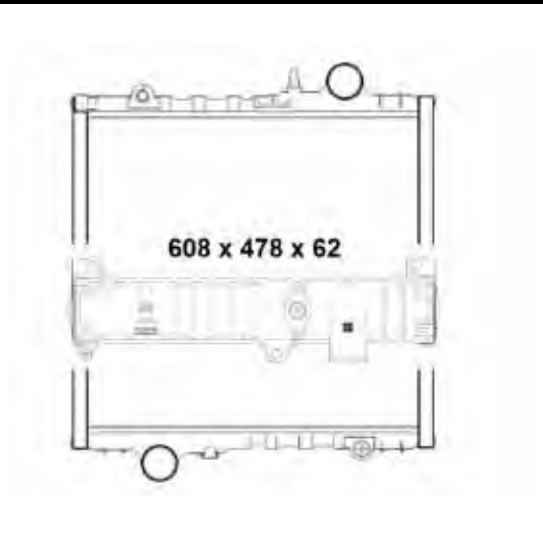

503340 608x478x62

John Deere

52248 425x350x76

John Deere **New Aluminium core!**

50585 576x503x77

John Deere **New Aluminium core!**

50584 516x503x77

John Deere **NEW**

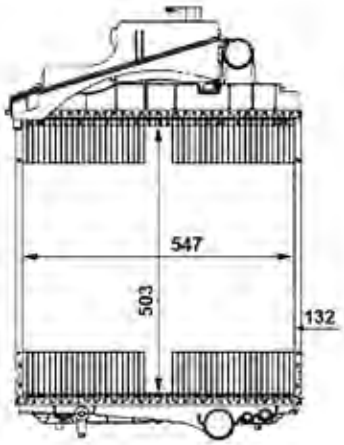

54109 503x547x132

John Deere **NEW**

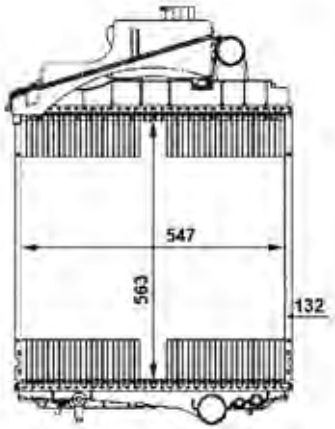

54110 563x547x132

John Deere

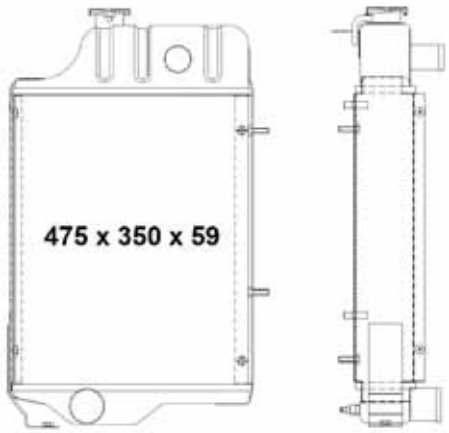

52138 475x348x75

Kubota **NEW**

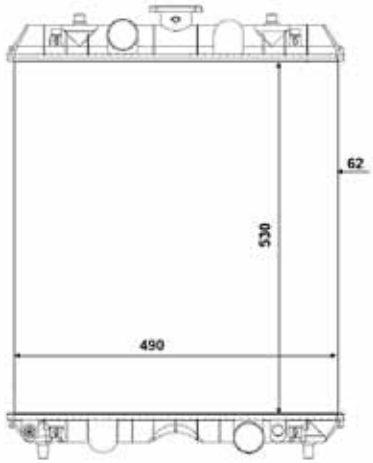

54106 530x490x62

Kubota **NEW**

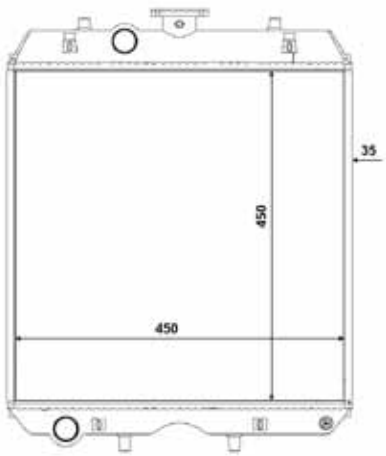

54108 450x450x35

Kubota **NEW**

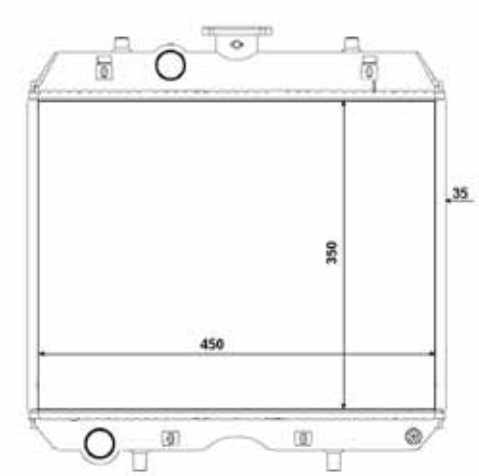

54107 350x450x35

Kubota **NEW**

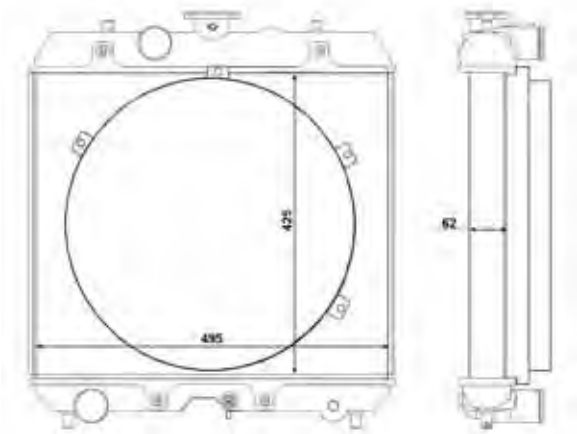

54103 425x495x62

Kubota **NEW**

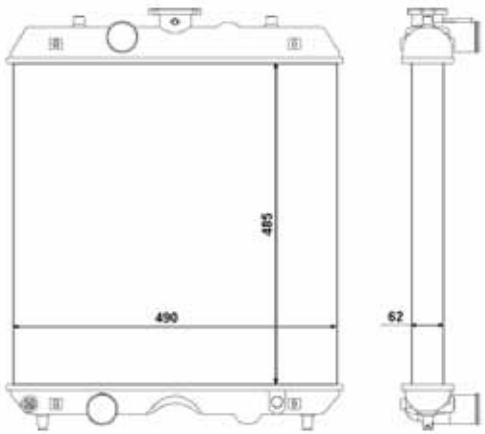

54104 485x490x62

Kubota **NEW**

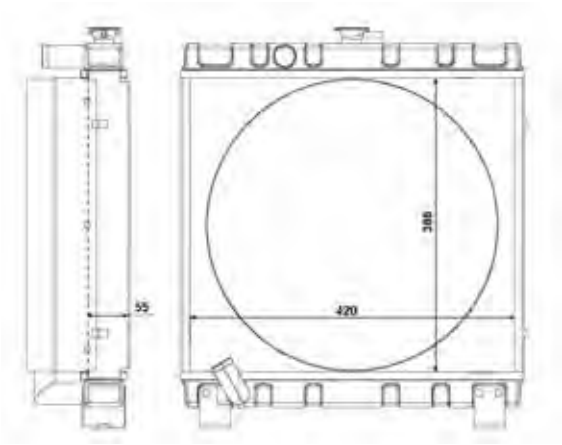

54105 380x420x55

Kubota

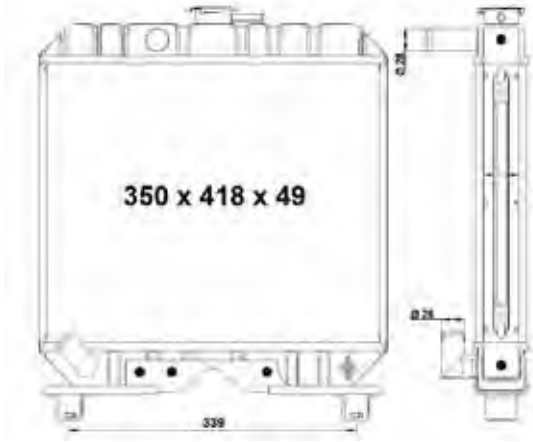

55352 350x418x49

Kubota **NEW**

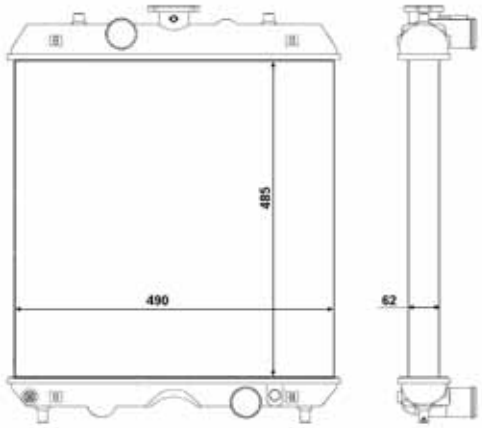

54102 485x490x62

Massey Ferguson

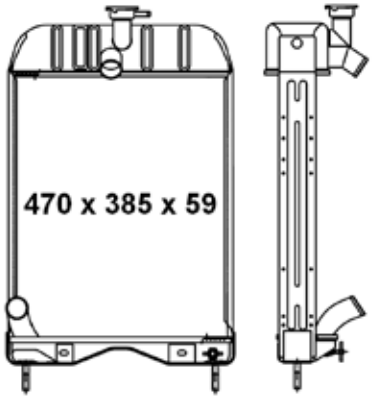

52145 470x385x59

Massey Ferguson

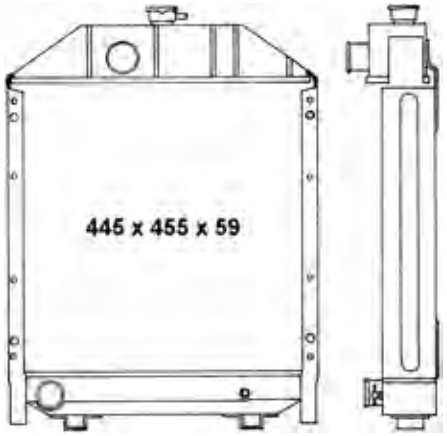

52208 445x455x59

Massey Ferguson

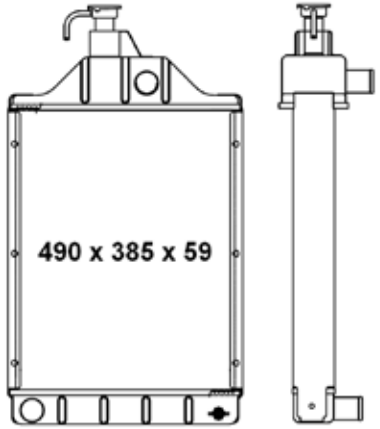

501768 490x385x59

Massey Ferguson

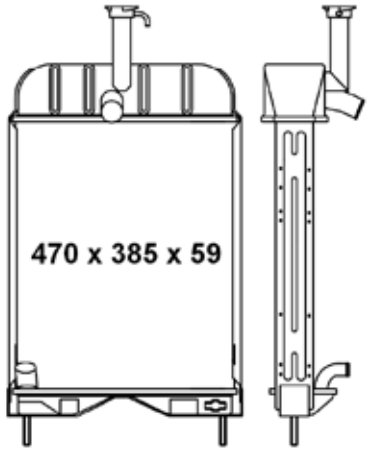

53656 470x385x59

Massey Ferguson

52181 465x530x57

Massey Ferguson

52179 505x530x59

Massey Ferguson

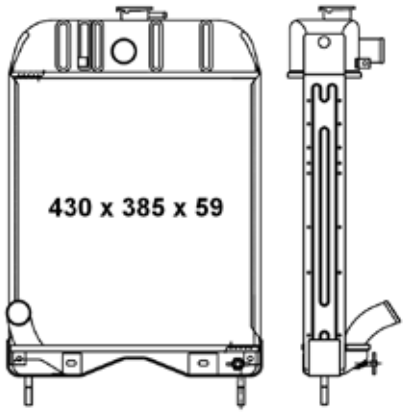

53654 430x385x59

Massey Ferguson

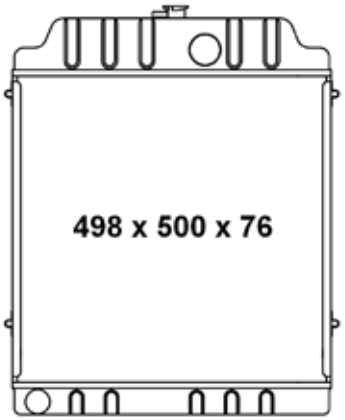

53655 498x500x76

Massey Ferguson **NEW**

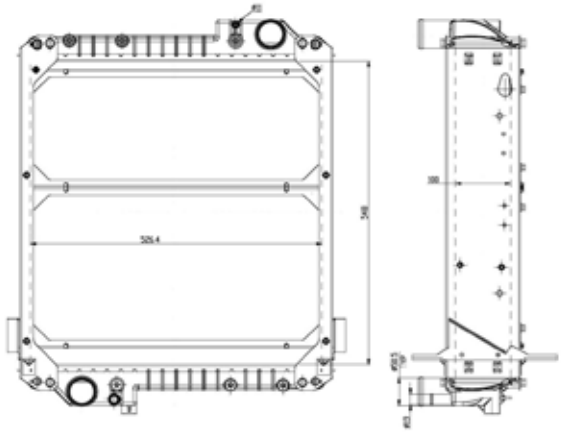

54085 548x526x100

Massey Ferguson

58408 483x380x59

Massey Ferguson **NEW**

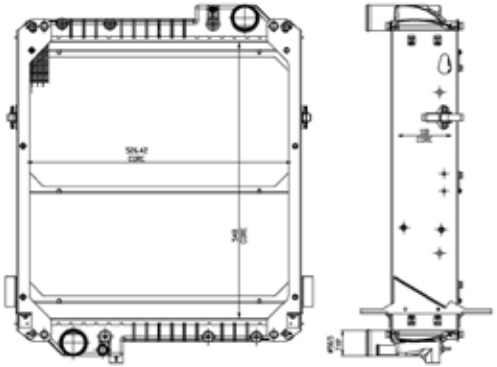

54072 548x526x100

Massey Ferguson **NEW**

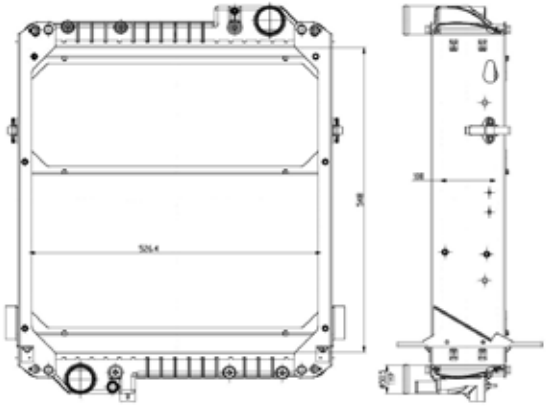

54073 548x526x100

Massey Ferguson **NEW**

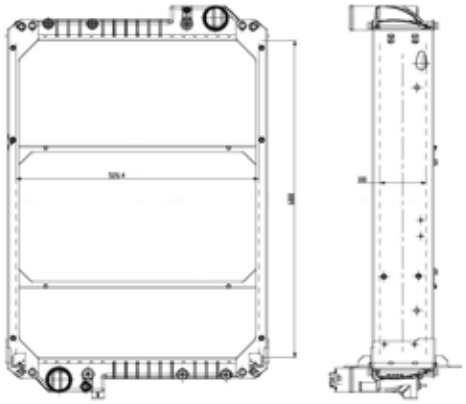

54074 688x526x100

Massey Ferguson **NEW**

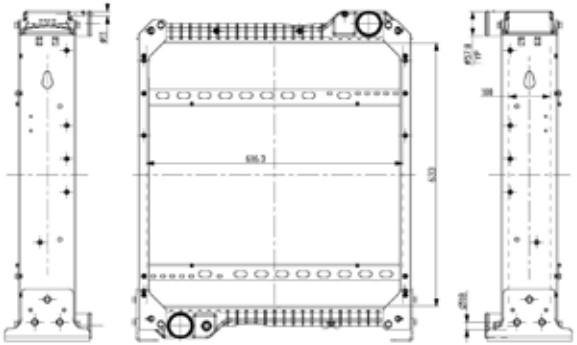

54076 633x616x100

Massey Ferguson **NEW**

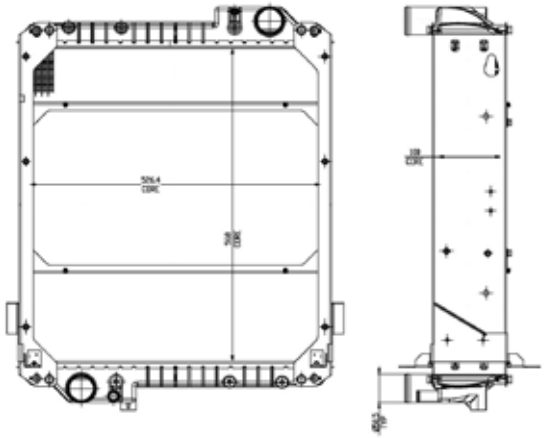

54071 568x526x100

Massey Ferguson

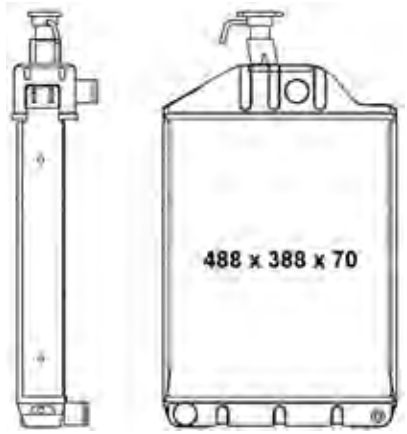

52161 490x395x59

Mercedes Unimog

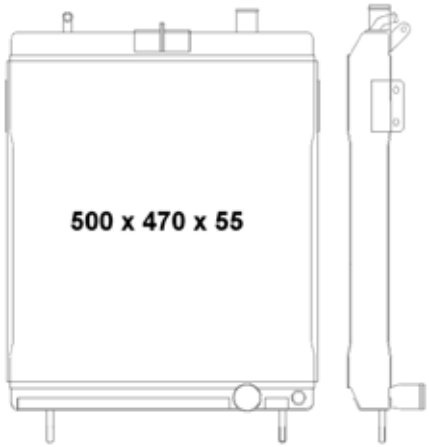

58406 510x475x55

Mercedes Unimog

53714 482x598x46

New Holland **NEW**

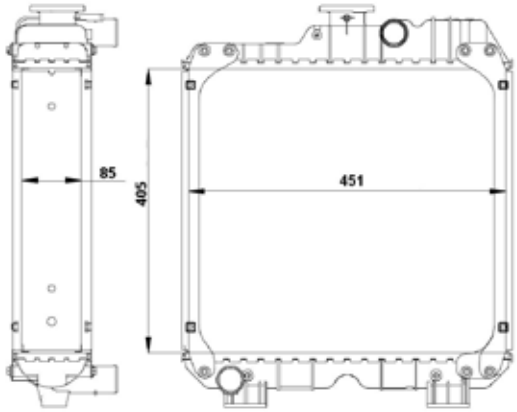

54100 405x451x85

New Holland **NEW**

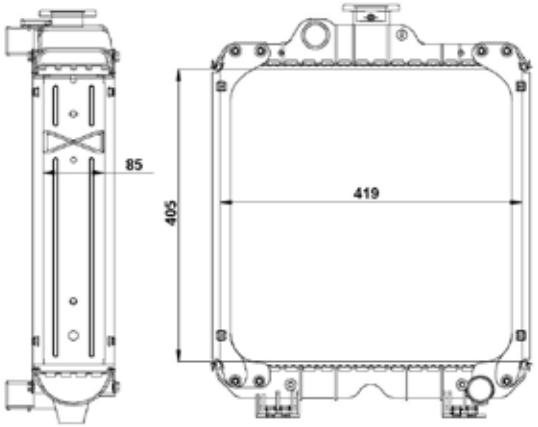

54098 405x419x85

New Holland **NEW**

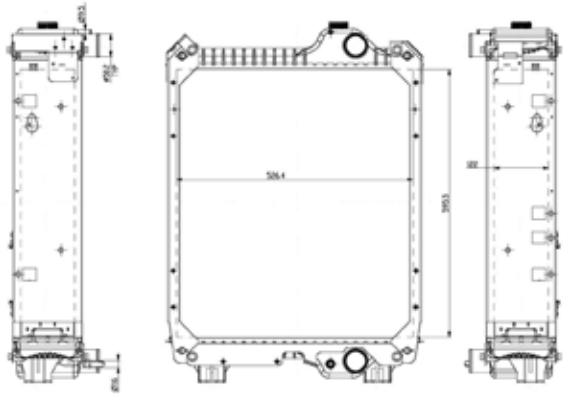

54082 595x526x122

New Holland

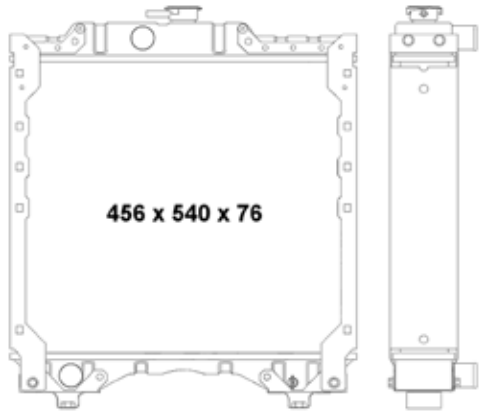

58405 465x540x76

New Holland **NEW**

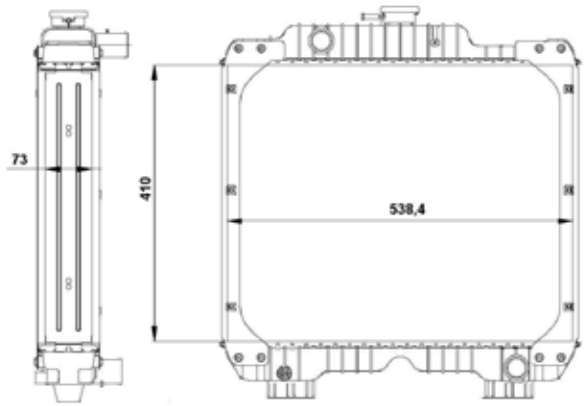

54099 410x538x73

New Holland **NEW**

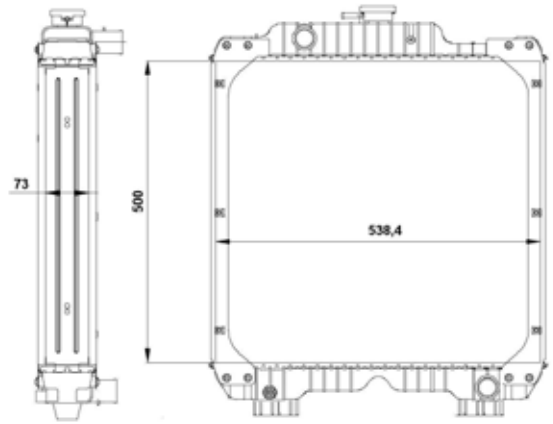

54090 500x538x73

New Holland **NEW**

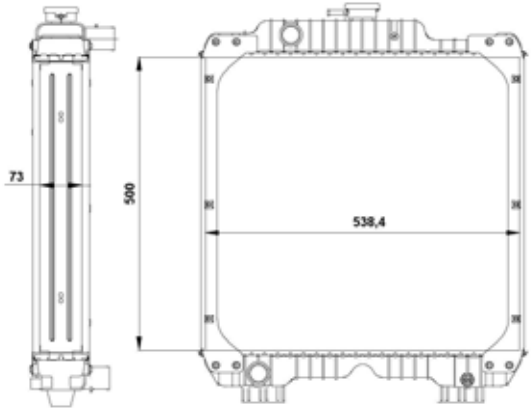

54091 500x538x73

New Holland **NEW**

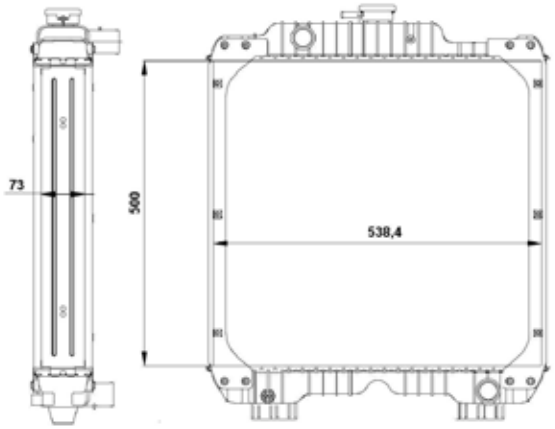

54092 500x538x73

New Holland **NEW**

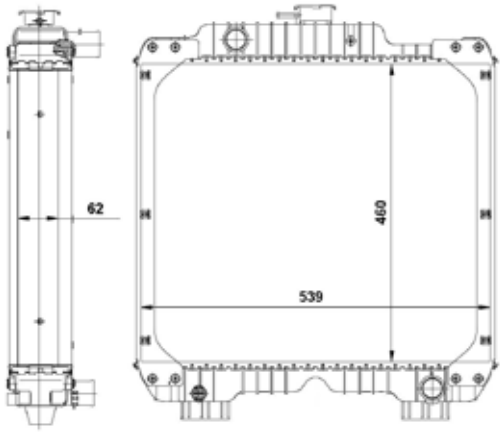

54069 460x539x62

New Holland **NEW**

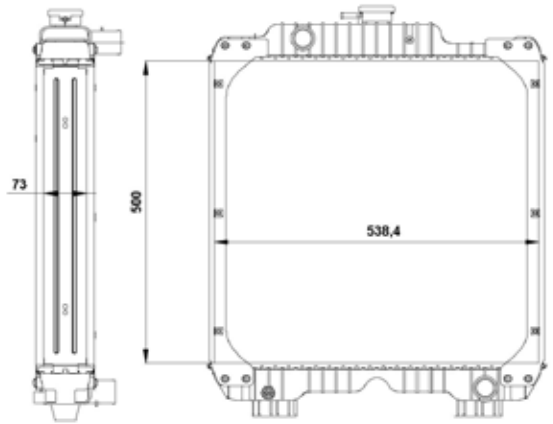

54089 460x539x62

New Holland **NEW**

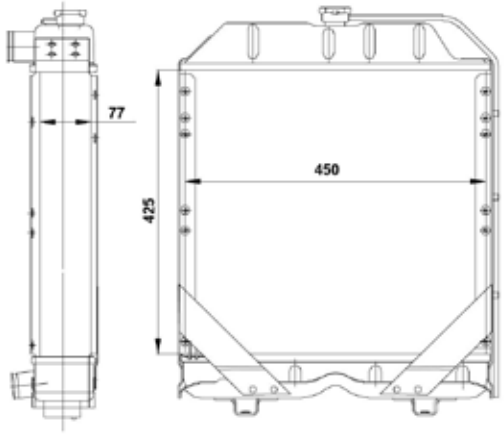

54101 425x450x77

New Holland

52106 633x523x97

New Holland **NEW**

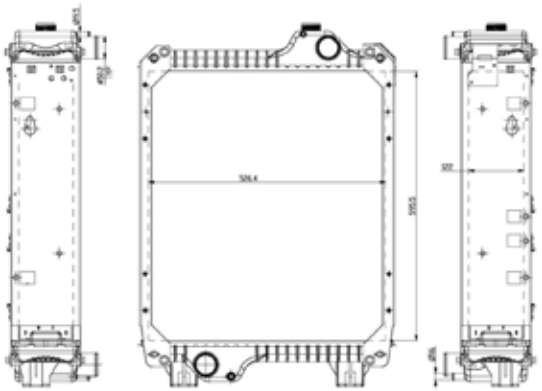

54079 595x526x122

New Holland

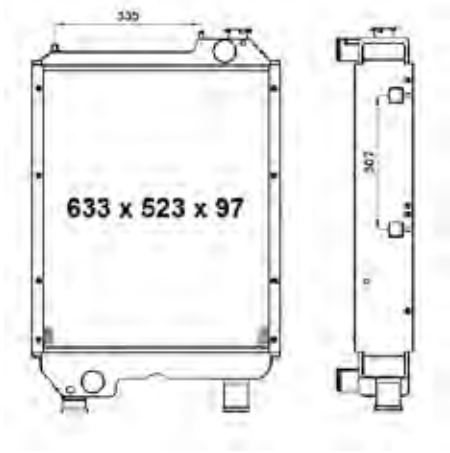

52107 633x523x97

New Holland **NEW**

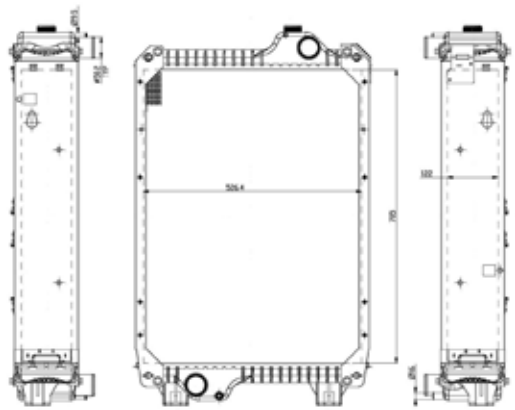

54080 705x526x122

New Holland **NEW**

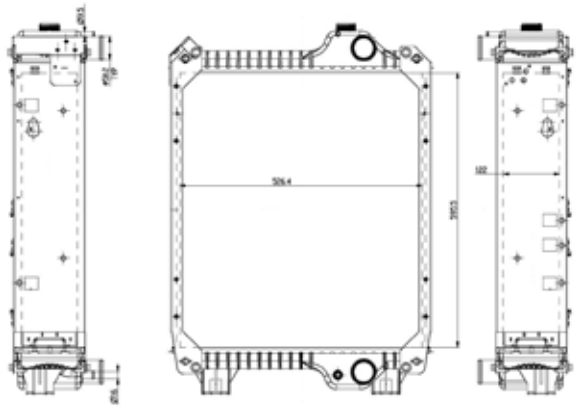

54081 595x526x122

Renault

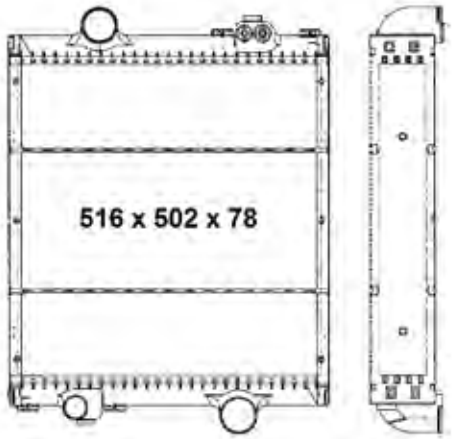

50492 516x502x78

Renault

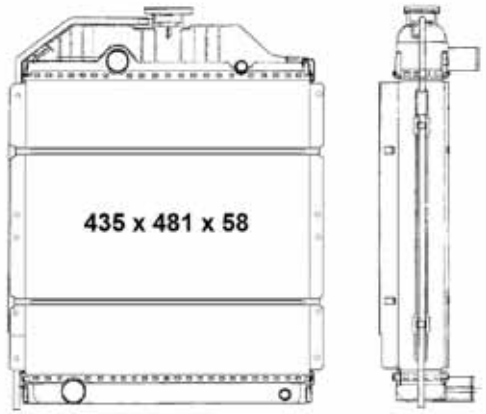

50490 435x481x58

Renault

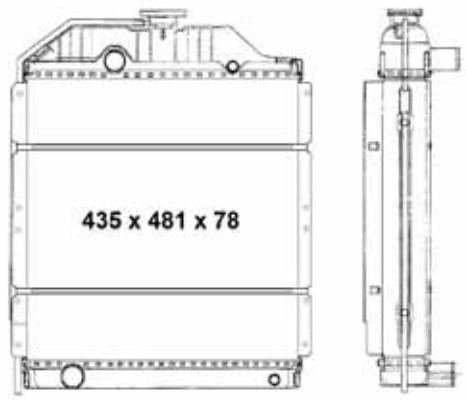

50489 435x481x78

Renault

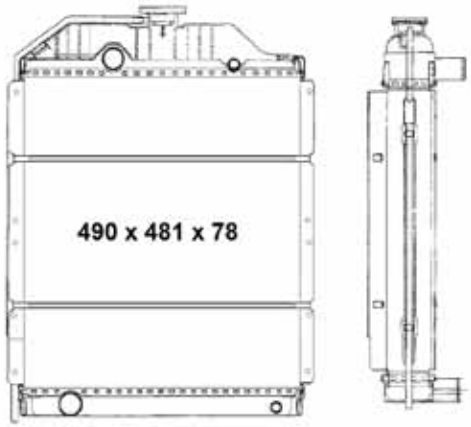

50491 490x481x78

Renault

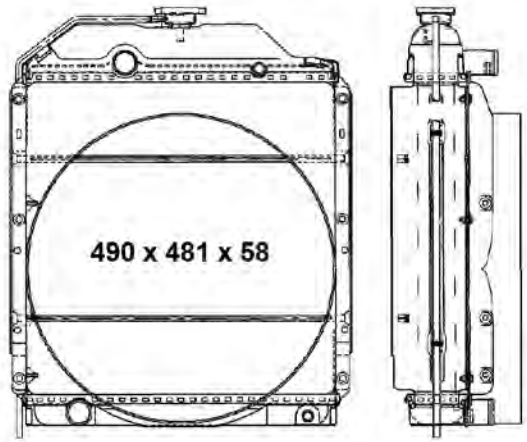

50498 490x481x58

Renault

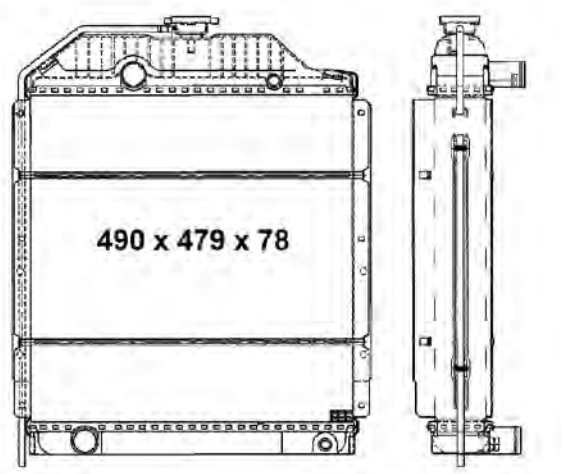

50499 490x479x78

Renault

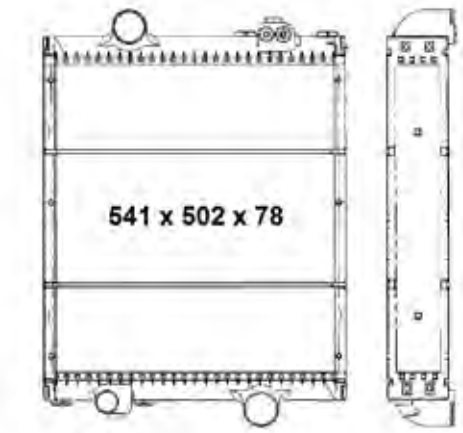

50494 541x502x78

Renault

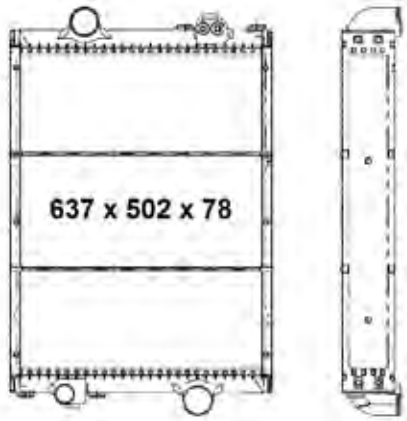

50495 637x502x78

Steyr **NEW**

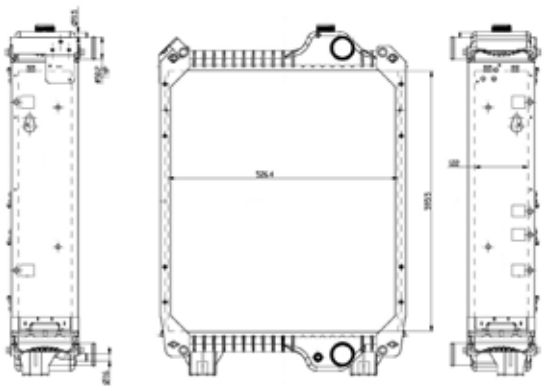

54081 595x526x122

Steyr **NEW**

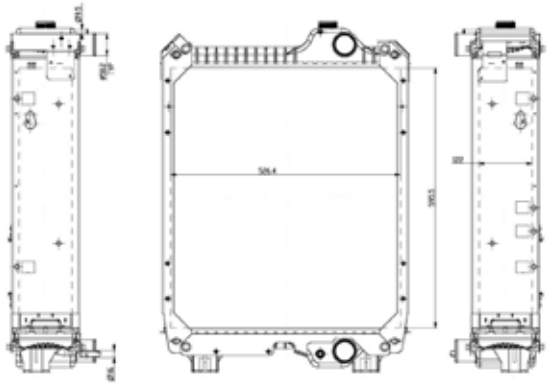

54082 595x526x122

Steyr **NEW**

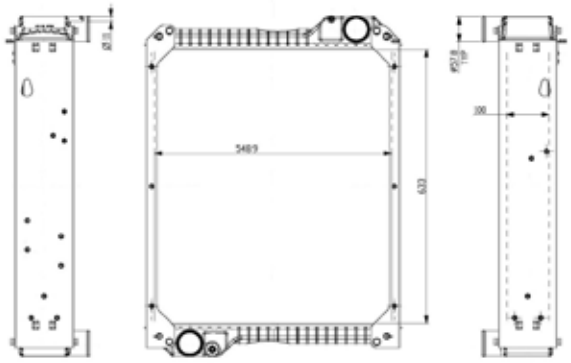

54075 633x549x100

Steyr

54028 405x365x44

Terex / Fermec

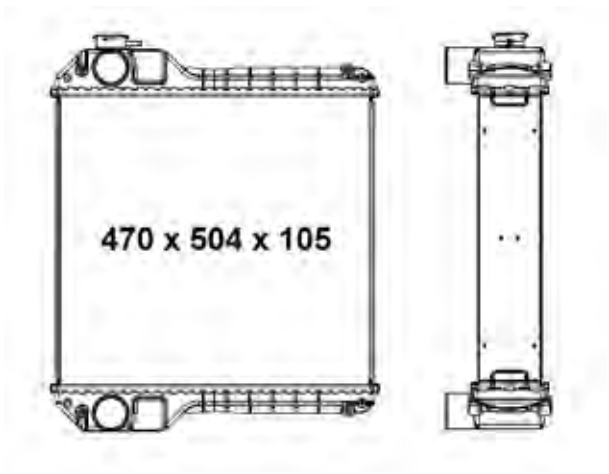

52193 470x520x105

Zetor

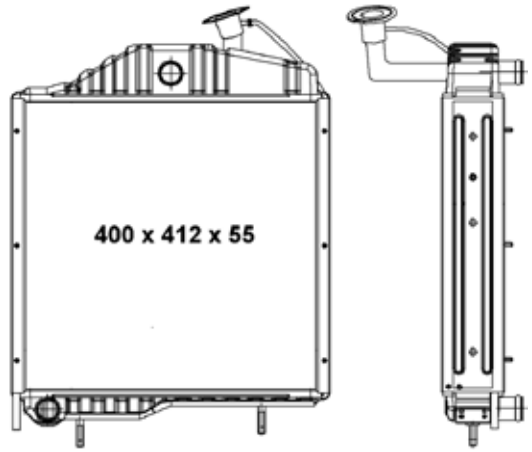

58407 400x412x55

Caterpillar **NEW**

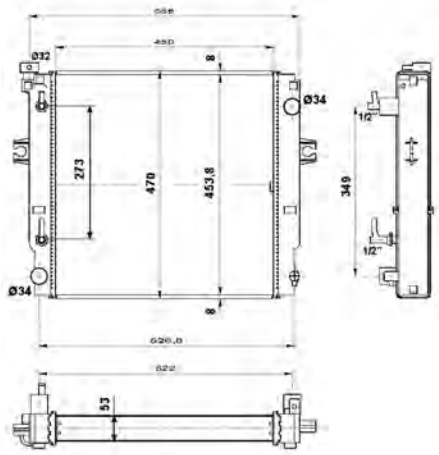

507567 450x469x53

Hyster

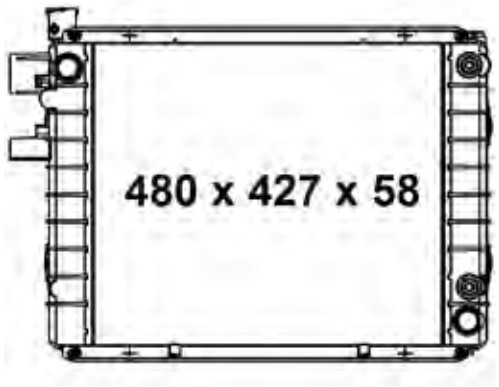

52298 481x427x58

Hyster / Yale

52300 426x427x48

Hyster

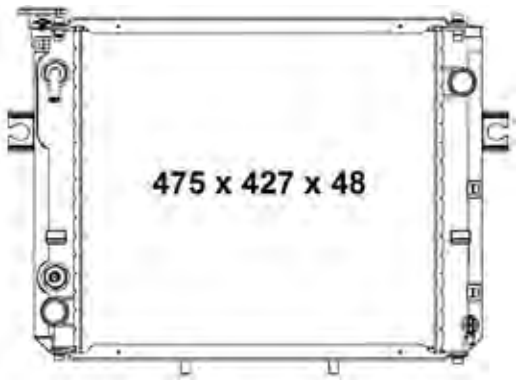

52301 475x427x48

Jungheinrich / Steinbock / Boss

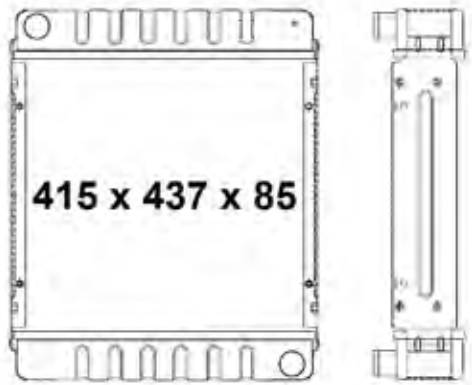

55311 415x437x85

Jungheinrich / Steinbock / Boss

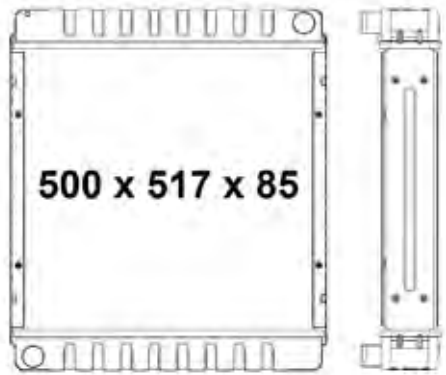

55312 500x517x85

Jungheinrich / Steinbock / Boss

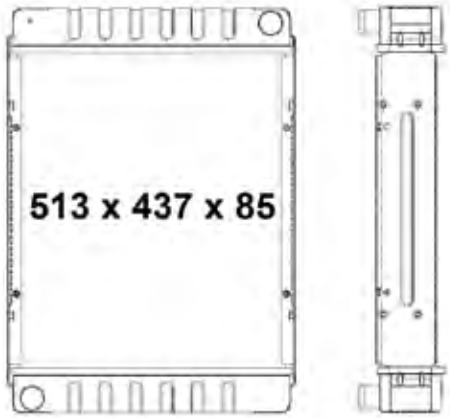

55313 513x437x85

Jungheinrich / Boss

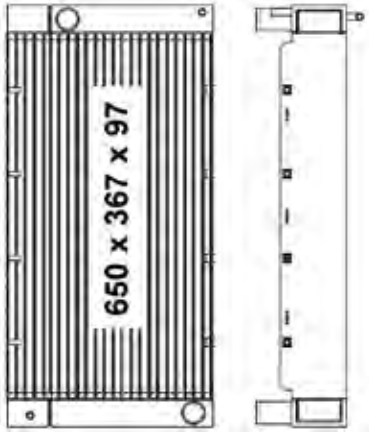

52192 650x367x97

Linde **NEW**

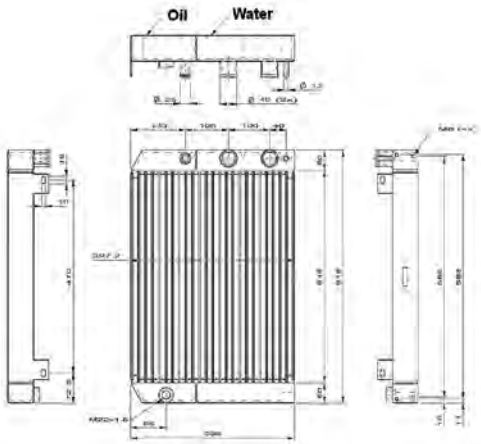

910070 502x399x64

Linde **NEW**

910071 530x349x80

Linde **NEW**

910072 580x503x97

Linde **NEW**

910073 550x461x64

Linde **NEW**

910074 554x462x97

Linde **NEW**

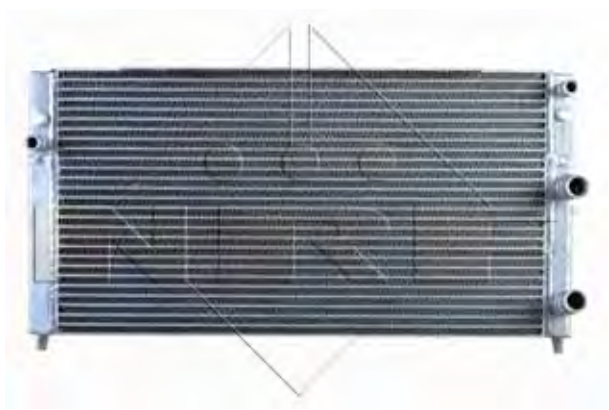

910075 700x388x94

Linde **NEW**

910076 650x121x94

Linde **NEW**

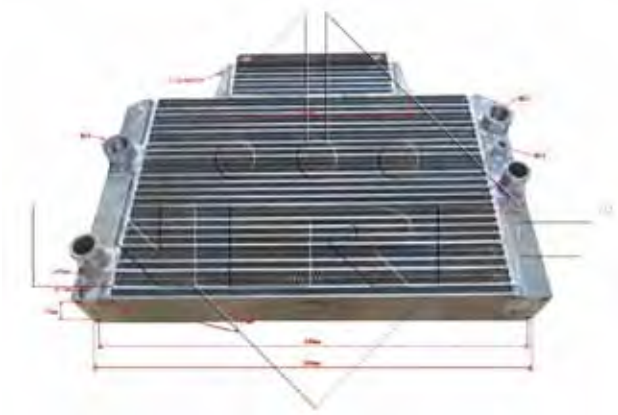

910077 580x503x97

Linde **NEW**

910078 309x147x160

Mitsubishi **NEW**

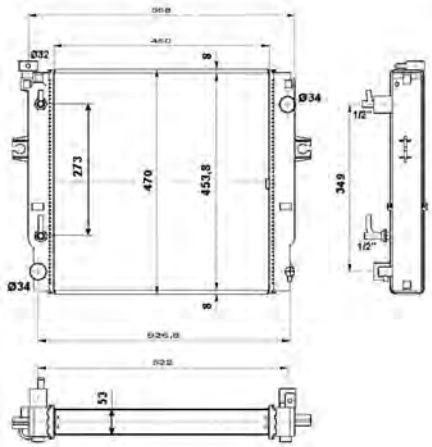

507567 450x469x53

Toyota

52278A 501x427x48

Toyota

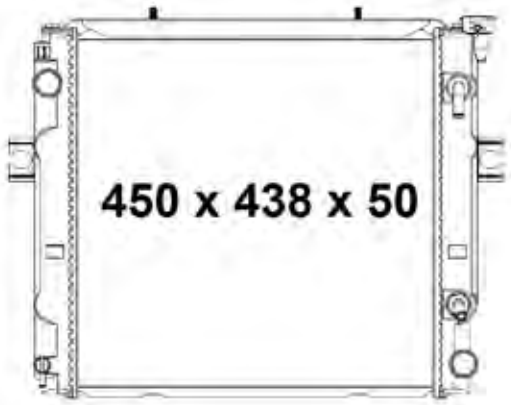

52279A 451x438x50

Toyota

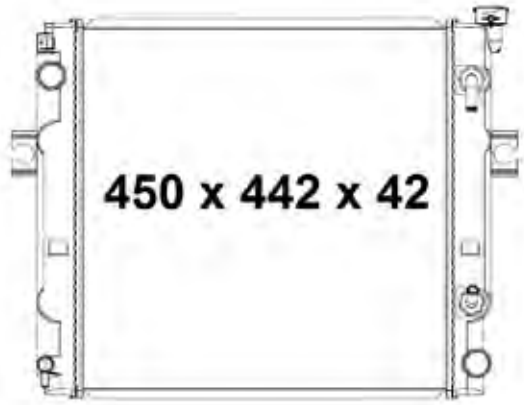

52297A 451x438x50

Toyota

52296A 500x430x48

Yale

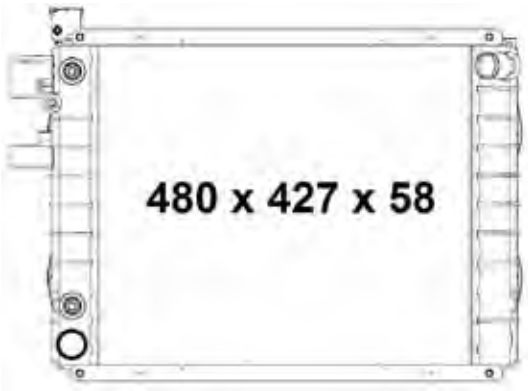

52299 481x420x58

Yale / Hyster

52302 475x427x48

Condensers / Condensers / Kondensatoren / Condenseurs / Condensadores / Condensadores / Condensatori / Skraplacze / Конденсоры

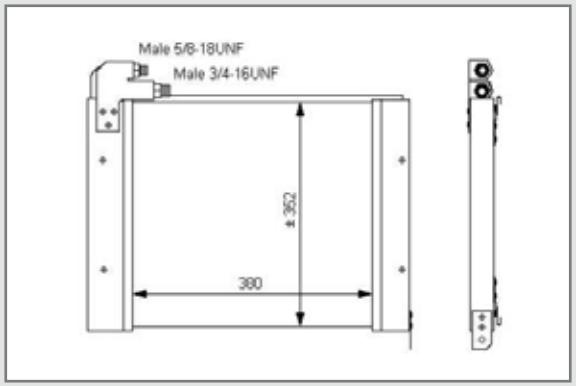

2. Condensers

Condensers / Kondensatoren / Condenseurs / Condensadores / Condensadores / Condensatori / Skraplacze / Конденсоры

Make		OE #	A x B x C	NRF #	
CASE IH					
CASE IH	CVX1135, CVX1145, CVX1155, CVX1170, CVX1190, CVX1195	708879AL, 162000530253, 3785702M1	510x395x32	350090	**NEW**
FENDT					
FENDT	916, 920, 926, 929, 930	H930550060100	570x620x16	350091	**NEW**
FENDT	700, 900, FAVORIT	H816550060100, H816550060101	408x530x22	35064	**NEW**
JOHN DEERE					
JOHN DEERE	TRACTOR (INCL. OILCOOLER)	AL111999	405x515x52	35371	
JOHN DEERE	TRACTOR 6610 (INCL. OILCOOLER)	AL78410	405x565x52	35370	
MASSEY-FERGUSON					
MASSEY-FERGUSON	(Sisu and Perkins engines) 5465, 5475, 6465, 6475, 6480, A.O.	4278496M1	340x540x22	350089	**NEW**
NEW HOLLAND					
NEW HOLLAND	TRACTOR TD95D	716550061100	403x350x22	35794	
STEYR					
STEYR	6135 CVT, 6145 CVT, 6155 CVT, 6170CVT, 6190 CVT, 6195 CVT	708879AL, 162000530253, 3785702M1	510x395x32	350090	**NEW**
VOLVO					
VOLVO	BM L70E	11006435, 11164324, 15053410, 15053413	720x375x38	35472	**NEW**

CASE IH **NEW**

350090 510x395x32

FENDT **NEW**

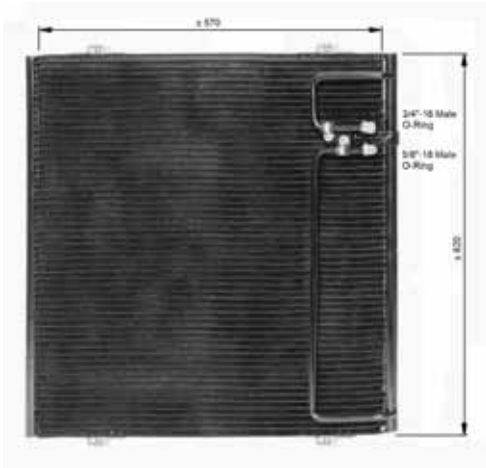

350091 570x620x16

FENDT **NEW**

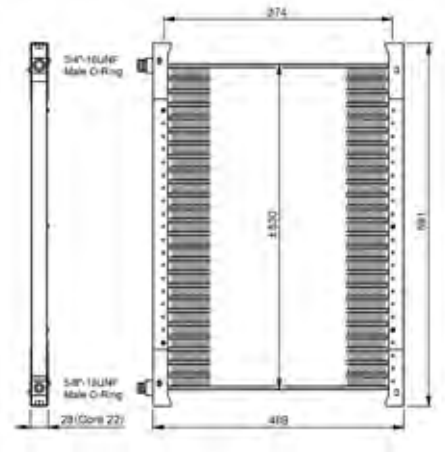

35064 408x530x22

JOHN DEERE

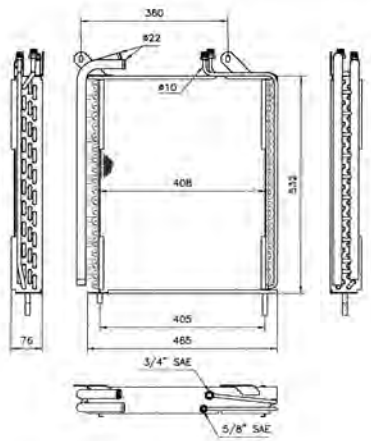

35371 405x515x52

JOHN DEERE

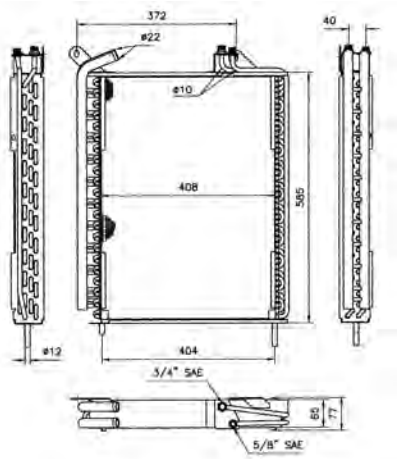

35370 405x565x52

MASSEY-FERGUSON **NEW**

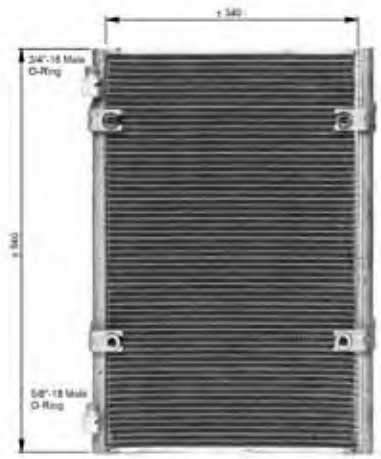

350089 340x540x22

NEW HOLLAND

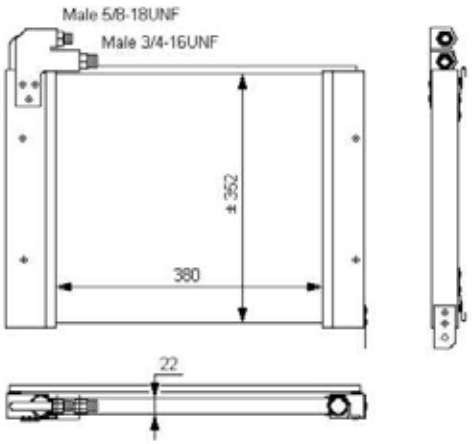

35794 403x350x22

STEYR **NEW**

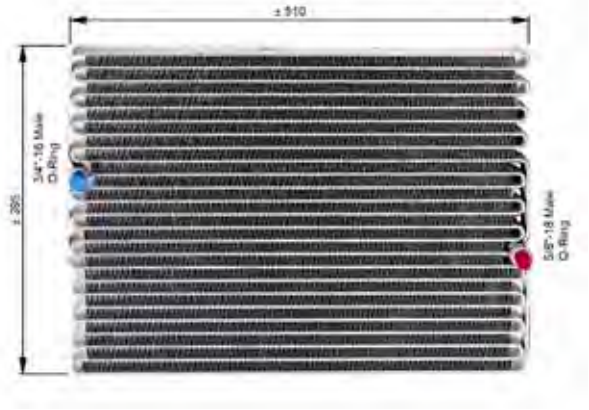

350090 510x395x32

VOLVO **NEW**

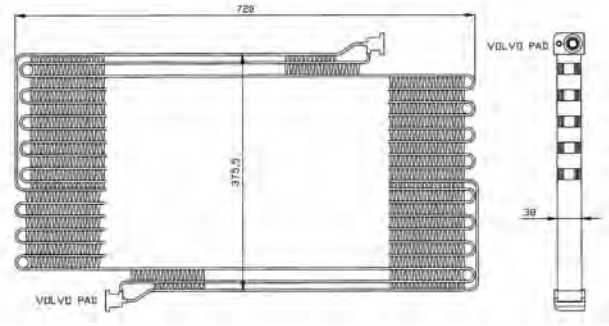

35472 720x375x38

Receiver Driers / Drogers / Trockner / Bouteilles déshydratantes / Filtros / Filtros desidratantes / Filtri / Osuszacze / Приемник - осушители

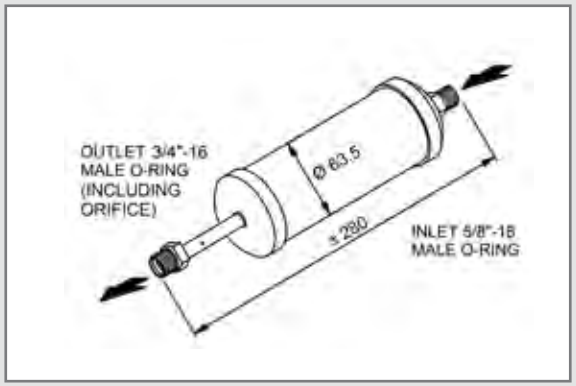

3. Receiver Driers

Drogers / Trockner / Bouteilles déshydratantes / Filtros / Filtros desidratantes / Filtri / Osuszacze / Приемник - осушители

Make		OE #	NRF #	
CASE IH				
CASE IH	4210	118304C1, 118304C2	33336	
CASE IH	VARIOUS	05811007	33219	**NEW**
CATERPILLAR				
CATERPILLAR	215, 225, 235, 245	696524, 8P9991	33292	**NEW**
CATERPILLAR	VARIOUS	08855901, 2573227	33337	**NEW**
CLAAS				
CLAAS	VARIOUS	0779810	33219	**NEW**
FENDT				
FENDT	FARMER	F395550031040, F395551031040	33340	
FENDT	FARMER 300, 400, FAVORIT 700, 900, GT 370, 380	G716550030010	33232	
FENDT	VARIO 716	716550030010	33098	
FORD				
FORD	40, 60-SERIES	82007131, 82012480	33283	
JOHN DEERE				
JOHN DEERE	6000-SERIES: 6120,6220,6320,6420,6520,6820,6920	AL163559	33331	
JOHN DEERE	VARIOUS	AR59870	33209	
KONVEKTA				
KONVEKTA	VARIOUS	B14AA1036, H14001036	33219	**NEW**
MASSEY FERGUSON				
MASSEY FERGUSON	5400-, 6400-, 8400-SERIES	4285797M1, 4285797M2	33332	
MASSEY FERGUSON	COMBINE 850,860,865	284208M92	33292	
NEW HOLLAND				
NEW HOLLAND	FX-SERIES: 30, 40, 50, 60	89832539	33292	
NEW HOLLAND	TM-115,-125,-135,-150,-165, TS-90,-100,-110,-115	82007131, 82012480	33283	
STEYR				
STEYR	VARIOUS	82023593, 9828498	33226	**NEW**

CASE IH

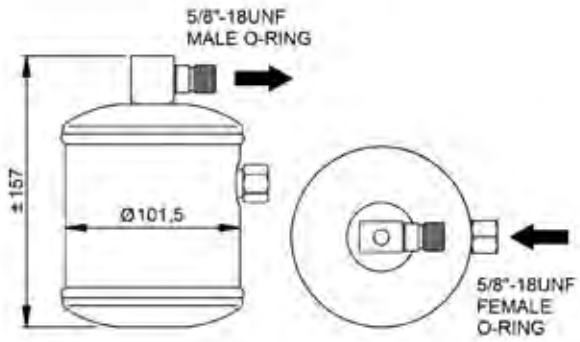

33336

CASE IH **NEW**

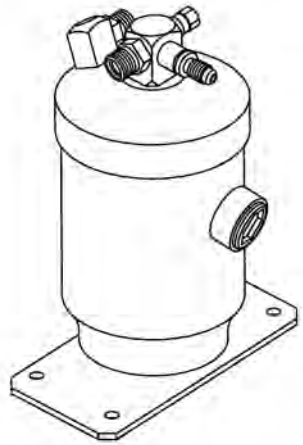

33219

CATERPILLAR **NEW**

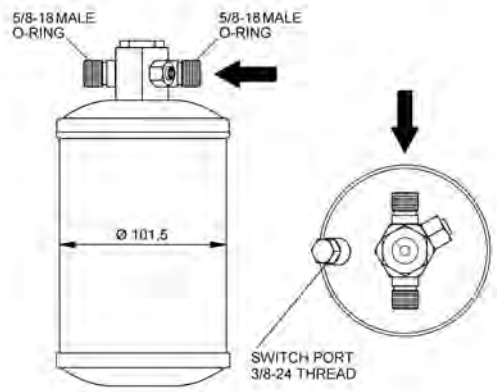

33292

CATERPILLAR **NEW**

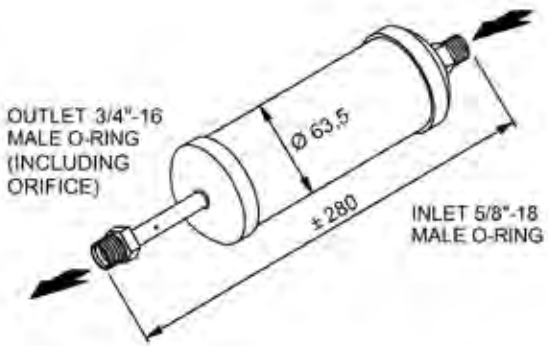

33337

CLAAS **NEW**

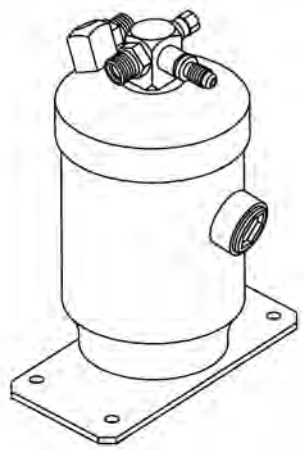

33219

FENDT

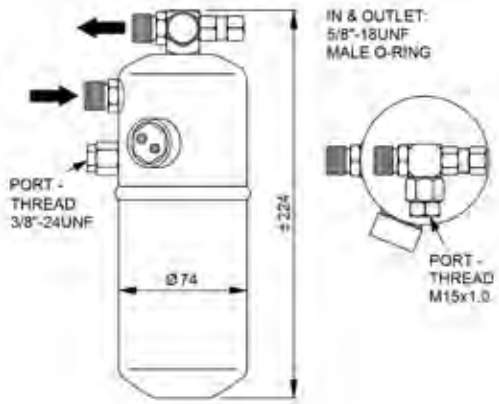

33340

FENDT

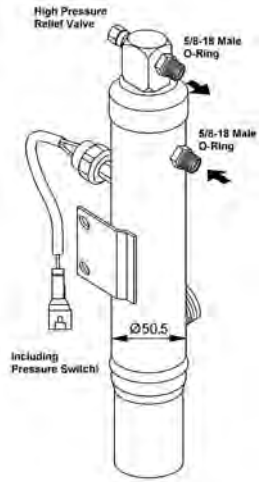

33232

FENDT

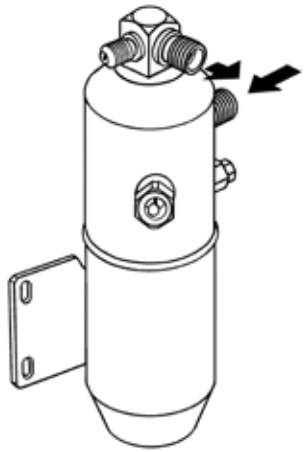

33098

FORD

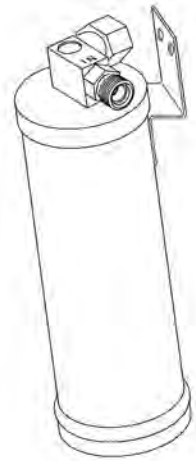

33283

JOHN DEERE

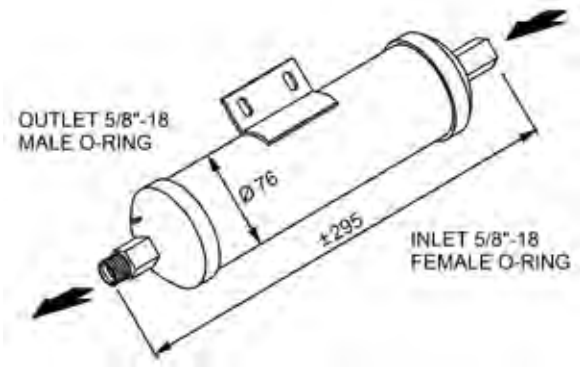

33331

JOHN DEERE

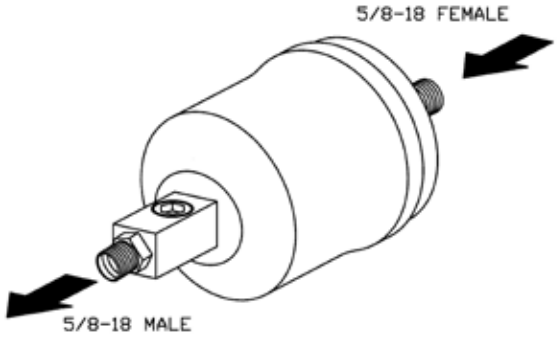

33209

KONVEKTA **NEW**

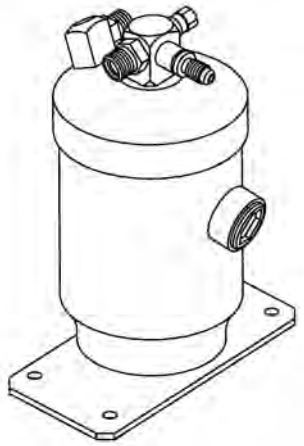

33219

MASSEY FERGUSON

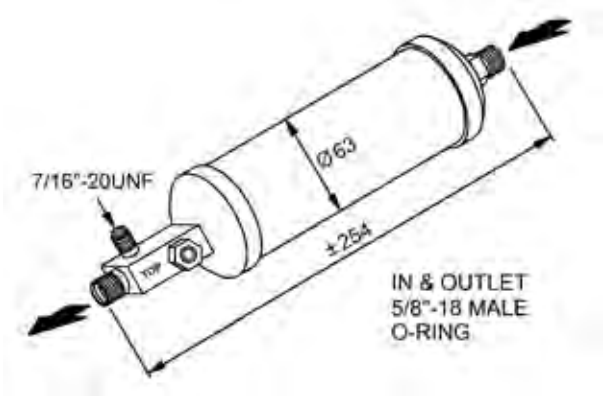

33332

MASSEY FERGUSON

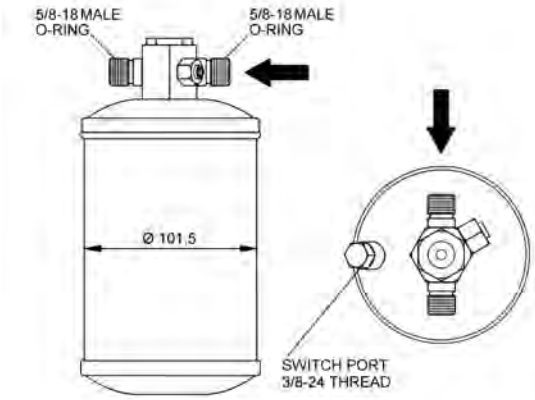

33292

NEW HOLLAND

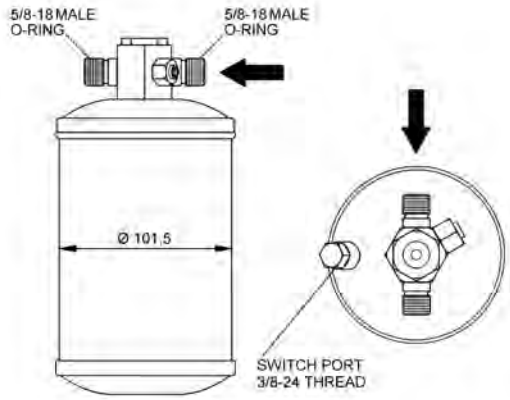

33292

NEW HOLLAND

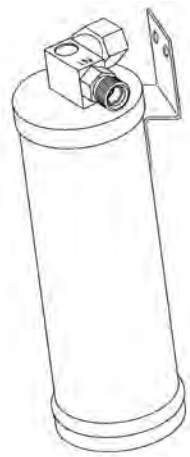

33283

STEYR **NEW**

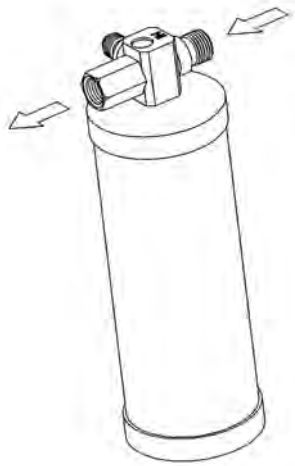

33226

Compressors / Compressoren / Kompressoren / Compresseurs / Compresores / Compressores / Compressori / Kompresory / Компрессоры

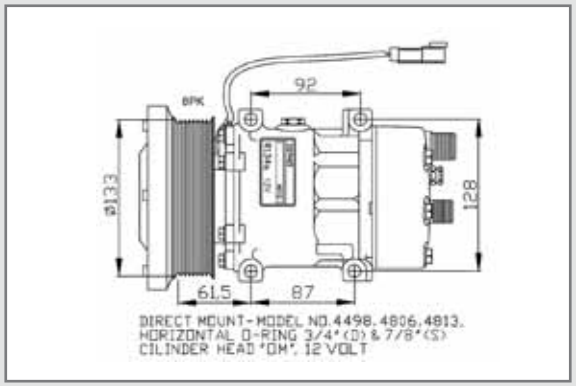

4. Compressors

Compressoren / Kompressoren / Compresseurs / Compresores / Compressores / Compressori / Kompresory / Компрессоры

Make		OE #	NRF #	
AGCO				
AGCO	SPRAYER ROGATOR, TERRAGATOR	86508521, AG518204	32798G	**NEW**
CASE IH				
CASE IH	CF60, CF70, CF80	03129547, 3129547	32766G	**NEW**
CASE IH	CY, MX, MAGNUM, MAXXUM	194121A1, 1990755C3, 1999755C2, 1999755C3, 47050714, 86993462	32756G	**NEW**
CASE IH	VARIOUS	84039022, 84056429	32131+G	
CASE IH	VARIOUS	82011594, 84011595, 84018087	32238+G	
CASE IH	VARIOUS	1780782, 1789570,7963460	32758G	**NEW**
CASE NEW HOLLAND				
CASE NEW HOLLAND	TS-SERIES	87709785, 87802912, 878029120	32759G	**NEW**
CASE NEW HOLLAND	VARIOUS	3405689C3, 3405689R2, 5176185	32760G	**NEW**
CATERPILLAR				
CATERPILLAR	322BL EXCAVATOR	3E1906	32281G	**NEW**
CATERPILLAR	VARIOUS	1780782, 1789570,7963460	32758G	**NEW**
CLAAS				
CLAAS	CHALLENGER	1780782, 1789570,7963460	32758G	**NEW**
CLAAS	JAGUAR, LEXION, MEDION, MEGA	6258771, 6258790	32763G	**NEW**
CLAAS	VARIOUS	6259932, 6259940	32814G	**NEW**
CLAAS	ARES, ATLES, CELTIS: ALL VERSIONS	10286831	32599G	
CLAAS	ARES, CELTIS: ALL VERSIONS	10327521	32600G	
CLAAS	AXION	11011550, 11011551	32602G	
CLAAS	VARIOUS	3503470	32132+G	**NEW**
CLAAS	VARIOUS	3269930, 47742400, 9385600	32238+G	
CLAAS	VARIOUS	7969990, 7969991, 7969992, 9062300311, 9062302011	32565G	**NEW**
DEUTZ-FAHR				
DEUTZ FAHR	AGROFARM, AGROTRON	04411400, 04437338, 1136524, 1136585, 4437338	32767G	**NEW**
DEUTZ-FAHR	AGROPLUS	01103234, 3550921M91, 6005016248, 87556183	32757G	**NEW**
DEUTZ-FAHR	AGROSUN 100	000771984, 001013184, 1013184, 771984	32762G	**NEW**
DEUTZ-FAHR	VARIOUS	04437339, 0443733910	32131+G	
DEUTZ-FAHR	VARIOUS	AG514573, 12304998, 16045127, 313785900, 32838600	32238+G	**NEW**
DOOSAN				
DOOSAN	FORESTRY MACHINE SOLAR, CRAWLER, MEGA, TXC	22086013B	32815G	**NEW**
FENDT				
FENDT	FARMER	G311550,G311550020100	32174G	

Make		OE #	NRF #	
FIATAGRI				
FIATAGRI	VARIOUS	71721691, 7637982, 7774059	32130+G	**NEW**
FIATAGRI	VARIOUS	84018078, 89831429	32131+G	
FORD NEW HOLLAND				
FORD NEW HOLLAND	FX 25, 28, 30, 38, 40, 45, 48, 50, 58, 60-SERIES	82011594, 84011595, 84018087	32238+G	
FORD NEW HOLLAND	VARIOUS	5165548, 5165549, 71379601	32130+G	**NEW**
FORD NEW HOLLAND	VARIOUS	84018077,84018078, 89831427, 89831429	32131+G	
JCB (BAMFORD)				
JCB (BAMFORD)	VARIOUS	47742400	32238+G	**NEW**
JOHN DEERE				
JOHN DEERE	6000, 7000-SERIES: ALL VERSIONS	AL154203, AL155836, AL176857, AL78779	32660G	
JOHN DEERE	COMBINE 2000, 2200-SERIES, Harvester	AZ44541	32659G	
JOHN DEERE	COMBINE 3400, 3800, 4800, 9000-SERIES, Forage Harvester	AH169875, AW23886, AW24173, RE46609, RE69716	32661G	
JOHN DEERE	FORWARDER, HARVESTER FORESTRY	AT172975	32662G	
JOHN DEERE	MOWER CONDITIONER, SPRAYER 4700, 4900, 6000-SERIES	AH169875, AW23886, AW24173, RE46609, RE69716	32661G	
JOHN DEERE	PREMIUM 5000, 6000	AL176858	32664G	
JOHN DEERE	TRACTOR 300, 5000, 7000, 8000, 9000-SERIES	AH169875, AW23886, AW24173, RE46609, RE69716	32661G	
KOBELCO				
KOBELCO	SK130 - SK235	TDKR1513105, TDKR151310S, TDKR151350S, YT20M00004S002, YX91V00001F1	32797G	**NEW**
KOMATSU				
KOMATSU	PC-, PW-, WA-SERIES	0K24261K00A, 1959118990	32243G	**NEW**
LAMBORGHINI				
LAMBORGHINI	VARIOUS	04437339, 0443733910	32131+G	
LIEBHERR				
LIEBHERR	EXCAVATOR 900 Series 05-	10115771, 10116769	32807G	**NEW**
LIEBHERR	VARIOUS	10116767, 5700334	32770G	**NEW**
LOTUS				
LOTUS	VARIOUS	A082P6064F	32238+G	**NEW**
MASSEY-FERGUSON				
MASSEY-FERGUSON	5400, 7400 SERIES	4281803M1	32771G	**NEW**
MASSEY-FERGUSON	TRACTOR 6235, 6245, 6255, 6260, 6265, 6270, 6280, 6290	3712528M2, 3763384M91, 3779466M1, 3782613M2	32274G	

Make		OE #	NRF #	
NEW HOLLAND				
NEW HOLLAND	40-, 60-, M-, TM-, TS-, TV-SERIES, 5640, 6640, 7740, 7840, 8240,8340	81866263,82002069,82008688,820161571,820161581,87709786	32142G	
NEW HOLLAND	TRACTOR TD75 D,TD80 D,TD85 D,TD95 D	5165548, 5165549, 71379601	32130+G	
RENAULT AGRI				
RENAULT AGRI	ARES, ATLES, CELTIS, ERGOS, TEMIS: All versions	7700038545	32599G	
RENAULT AGRI	ARES, CELTIS: ALL VERSIONS	7700042614	32600G	
RENAULT AGRI	TEMIS 550, 610, 630, 650	7700053414	32601G	
RENAULT AGRI	VARIOUS	6025107881,7700734103,7700856259,7700857170,7700863108,7701499840	32132+G	**NEW**
RENAULT AGRI	VARIOUS	7700037805	32814G	**NEW**
VOLVO				
VOLVO	CONSTRUCTION DIGGER	11007314, 110073145, 11007857, 11058974, 11104512, 111045126, 8150135, 8150136	32769G	**NEW**
VOLVO	WHEELLOADER D-SERIES 01-03	11104419, 11412632, 14506862, 15082742	32469G	**NEW**

AGCO **NEW**

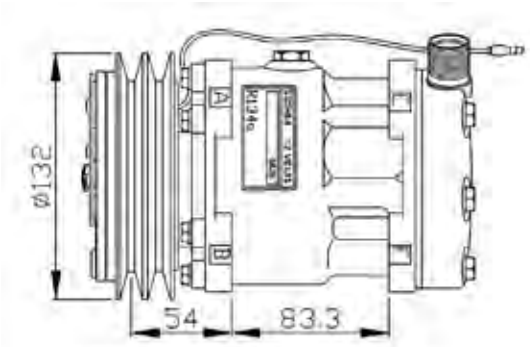

32798G

CASE IH **NEW**

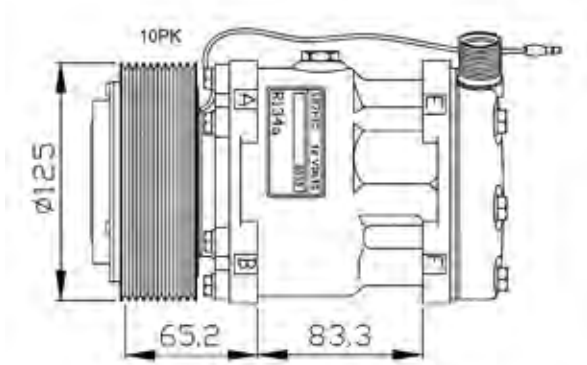

32766G

CASE IH **NEW**

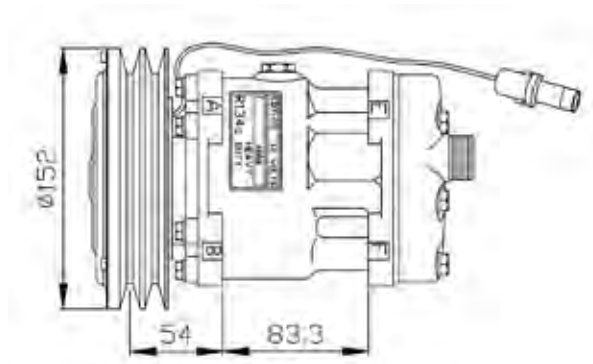

32756G

CASE IH

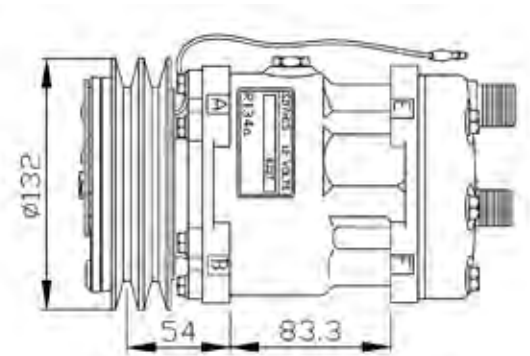

32131+G

CASE IH

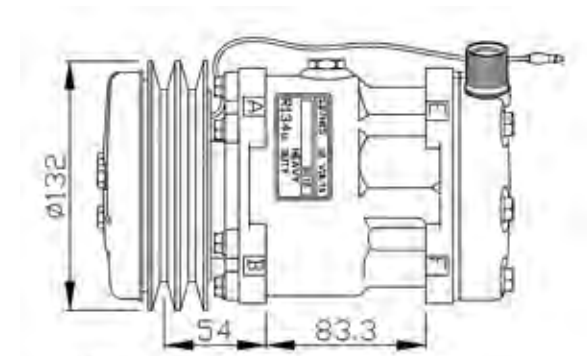

32238+G

CASE IH **NEW**

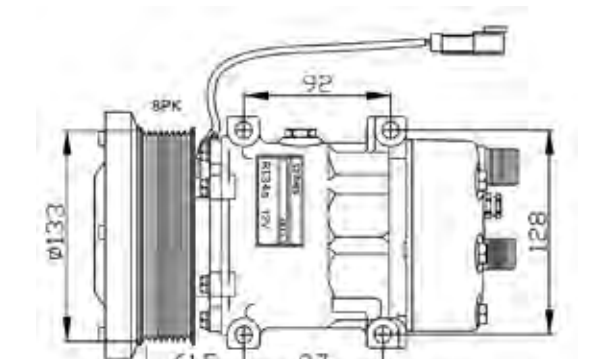

32758G

CASE NEW HOLLAND **NEW**

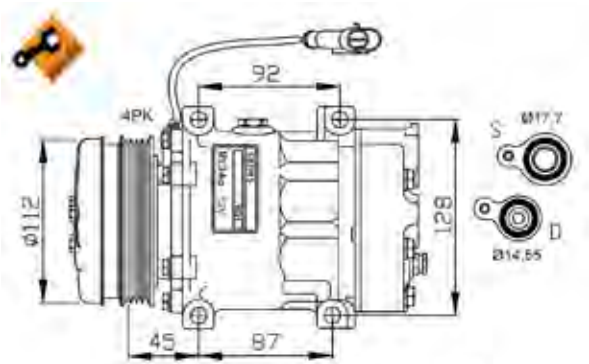

DIRECT MOUNT - MODEL NO. 6021, 8148,
CILINDER HEAD "WV", 12 VOLT

32759G

CASE NEW HOLLAND **NEW**

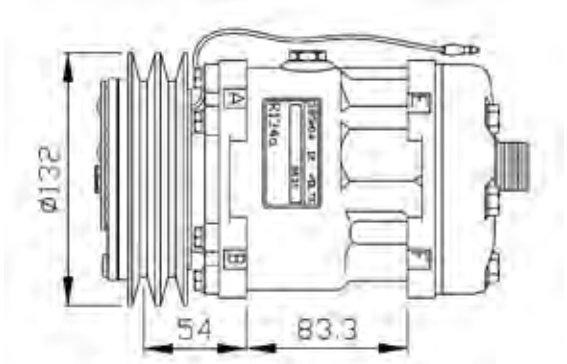

SD5H14 MODEL NO. 4513, 4526, 6631
HORIZONTAL TUBE-O 1"-14 (D) & 1"-14 (S)
12 VOLT, CYL. HEAD "M/MD"

32760G

CATERPILLAR **NEW**

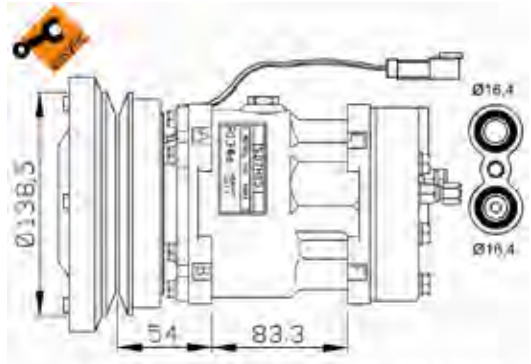

SD7H15 (MODEL NO. 4604, 4656, 8064, 8171)
CYLINDER HEAD "DK" (CM-PAD)
1A-GROOVE, 24 VOLT

32281G

CATERPILLAR **NEW**

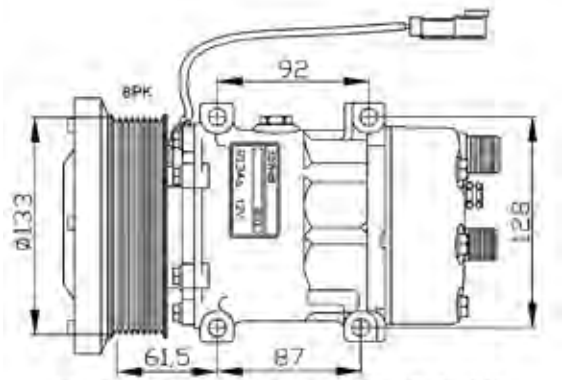

DIRECT MOUNT - MODEL NO. 4498, 4806, 4813
HORIZONTAL O-RING 3/4" (D) & 7/8" (S)
CILINDER HEAD "DM", 12 VOLT

32758G

CLAAS **NEW**

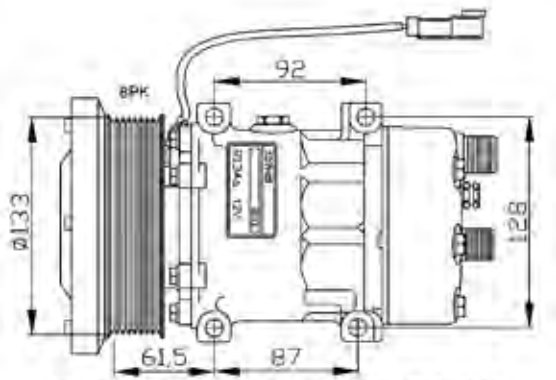

DIRECT MOUNT - MODEL NO. 4498, 4806, 4813
HORIZONTAL O-RING 3/4" (D) & 7/8" (S)
CILINDER HEAD "DM", 12 VOLT

32758G

CLAAS **NEW**

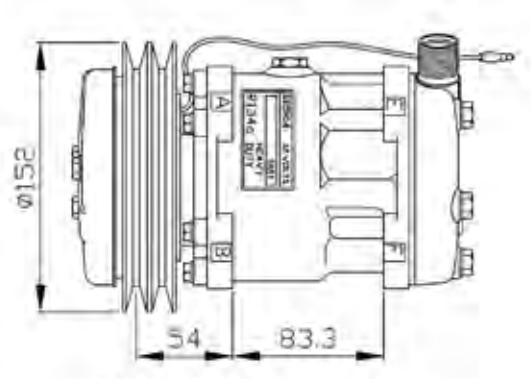

SD5H14 MODEL 6651,
STANDARD O-RING 3/4" (D) & 7/8" (S),
12 VOLT, 8 EAR MOUNT, CYL. HEAD "FL"

32763G

CLAAS **NEW**

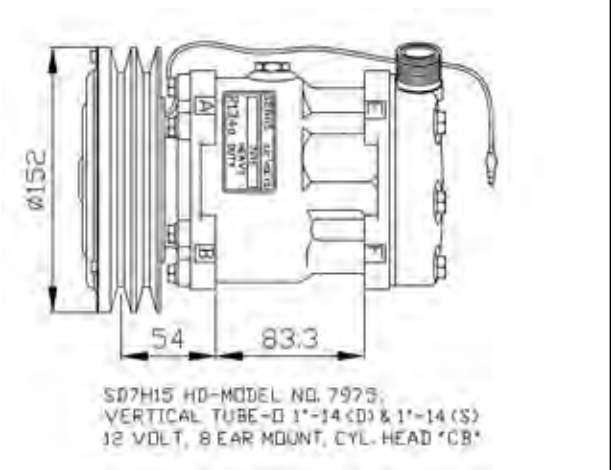

32814G

CLAAS

32599G

CLAAS

32600G

CLAAS

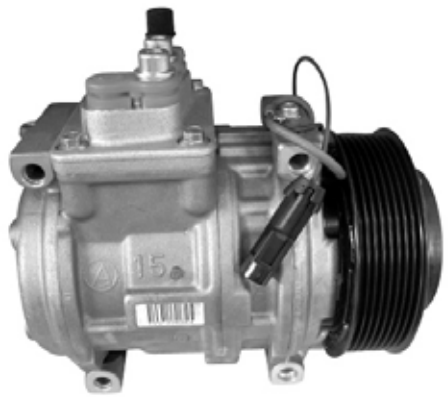

32602G

CLAAS **NEW**

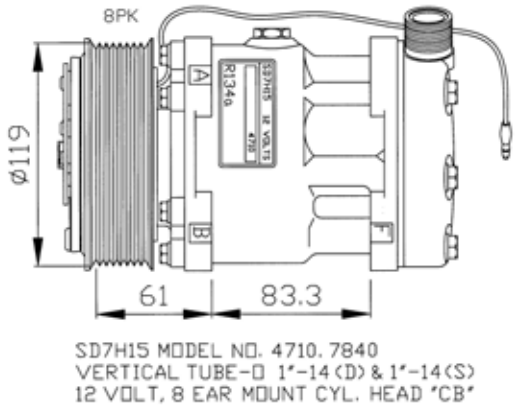

32132+G

CLAAS

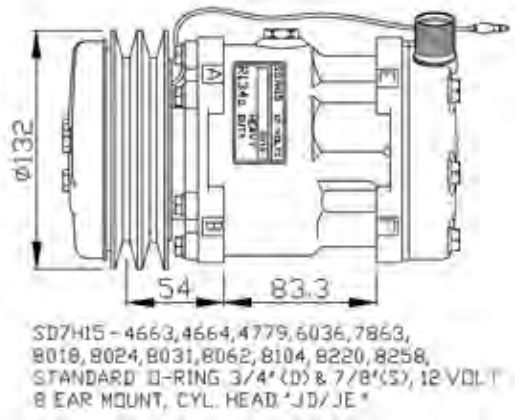

32238+G

CLAAS **NEW**

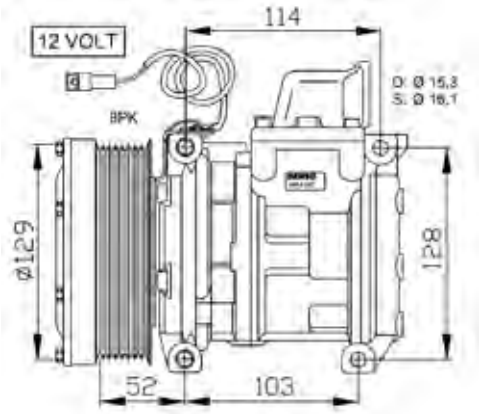

32565G

DEUTZ FAHR **NEW**

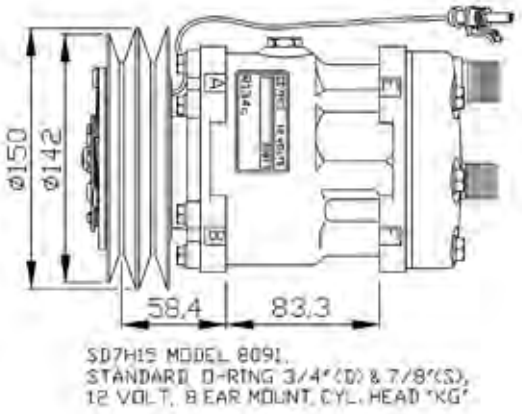

32767G

DEUTZ-FAHR **NEW**

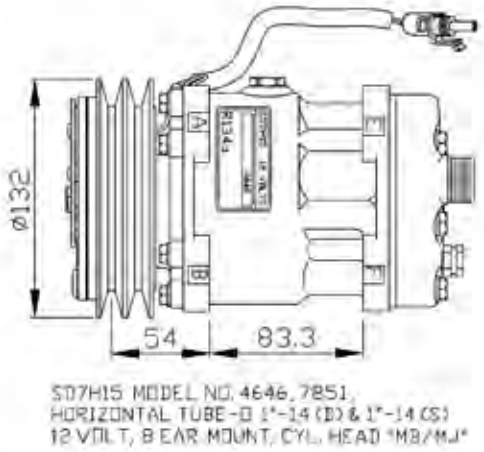

32757G

DEUTZ-FAHR **NEW**

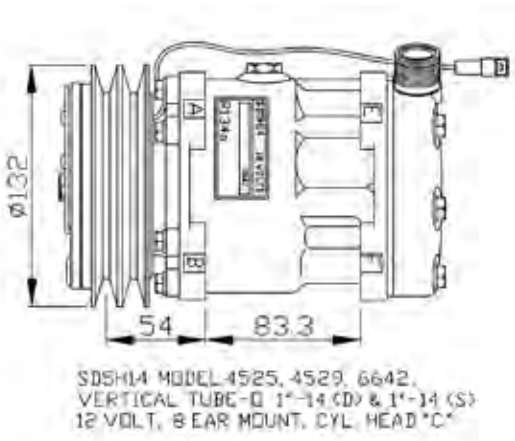

32762G

DEUTZ-FAHR

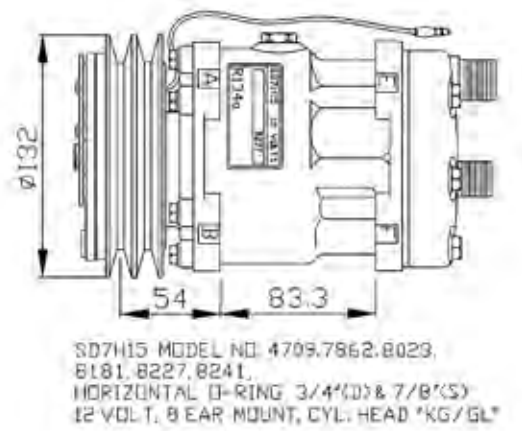

32131+G

DEUTZ-FAHR **NEW**

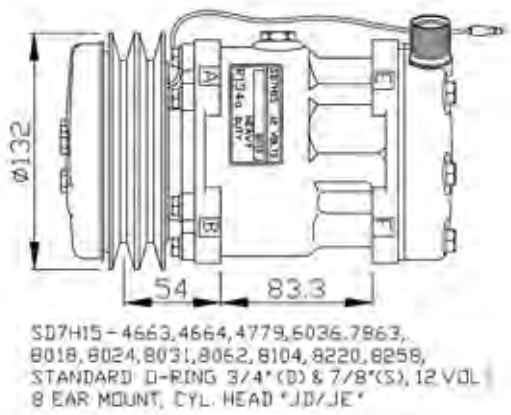

32238+G

DOOSAN **NEW**

32815G

FENDT

32174G

FIATAGRI **NEW**

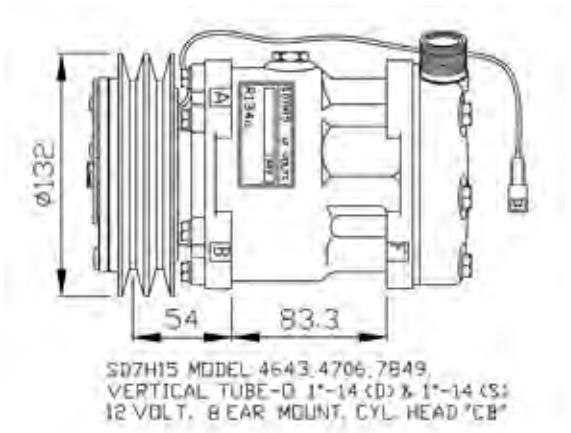

32130+G

FIATAGRI

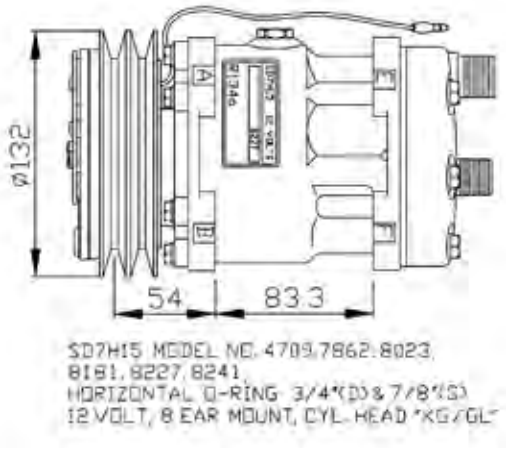

32131+G

FORD NEW HOLLAND

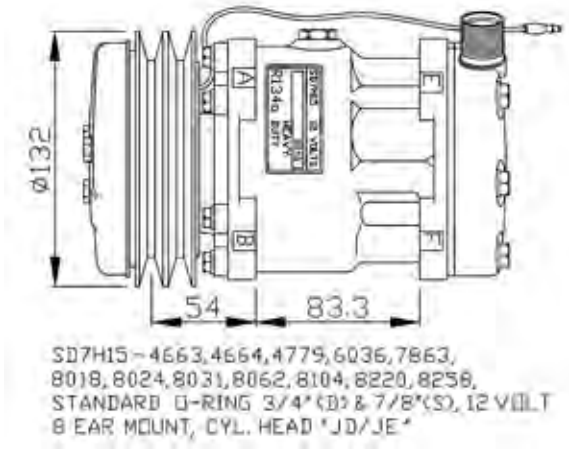

32238+G

FORD NEW HOLLAND **NEW**

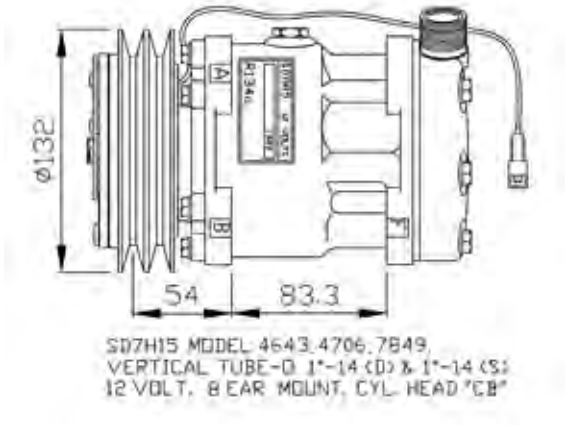

32130+G

FORD NEW HOLLAND

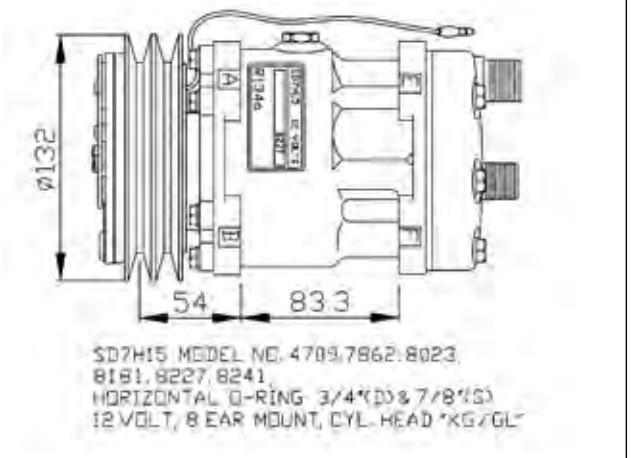

32131+G

JCB (BAMFORD) **NEW**

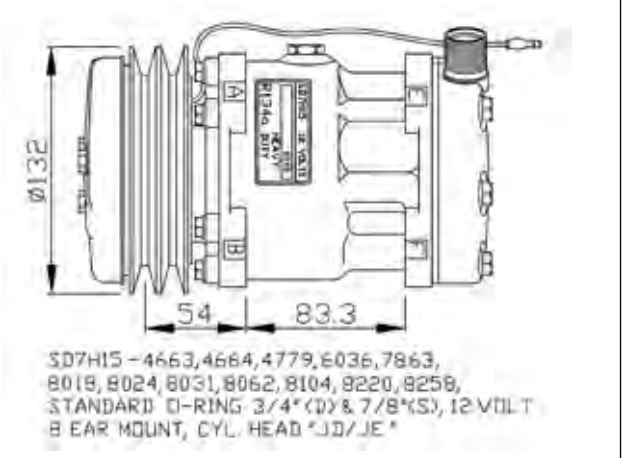

32238+G

JOHN DEERE

32660G

JOHN DEERE

32659G

JOHN DEERE

32661G

JOHN DEERE

32662G

JOHN DEERE

32661G

JOHN DEERE

32664G

JOHN DEERE

32661G

KOBELCO **NEW**

32797G

KOMATSU **NEW**

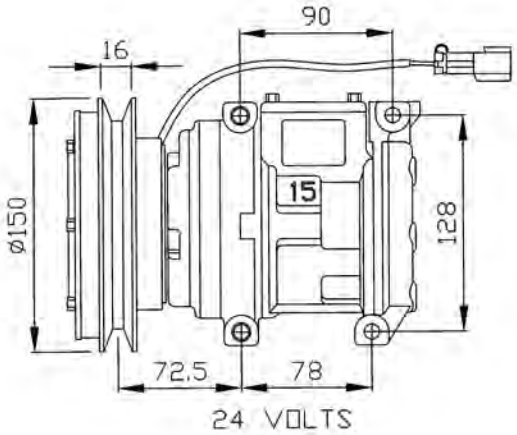

32243G

LAMBORGHINI

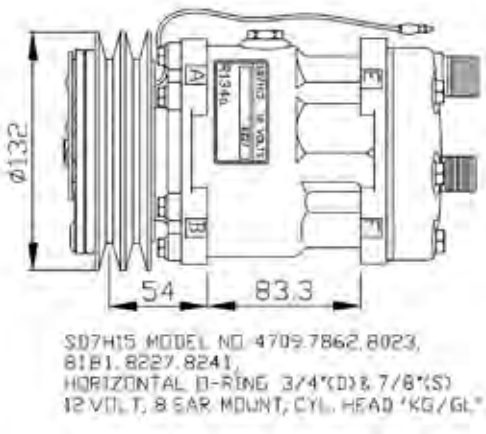

32131+G

LIEBHERR **NEW**

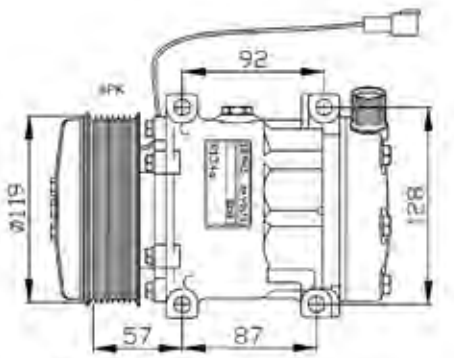

SD7H15 - 8234,
STANDARD O-RING 3/4"(D) & 7/8"(S),
24 VOLT, CYL. HEAD "JE"

32807G

LIEBHERR **NEW**

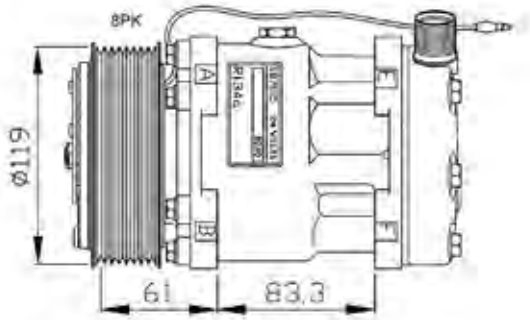

SD7H15 - 8086, 8139, 8233, 8240,
STANDARD O-RING 3/4"(D) & 7/8"(S),
24 VOLT, 8 EAR MOUNT, CYL. HEAD "JE"

32770G

LOTUS **NEW**

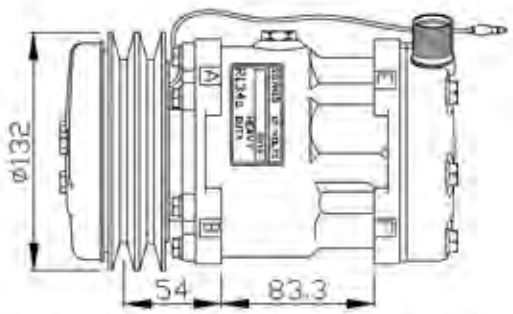

SD7H15 - 4663, 4664, 4779, 6036, 7863,
8018, 8024, 8031, 8062, 8104, 8220, 8258,
STANDARD O-RING 3/4"(D) & 7/8"(S), 12 VOLT
8 EAR MOUNT, CYL. HEAD "JD/JE"

32238+G

MASSEY-FERGUSON **NEW**

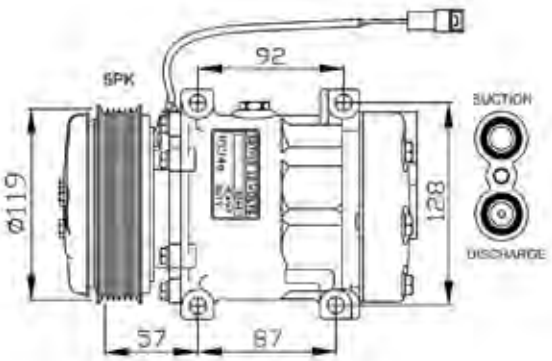

SD7H15 MODEL 6244,
CILINDER HEAD "QC", 12 VOLT

32771G

MASSEY-FERGUSON

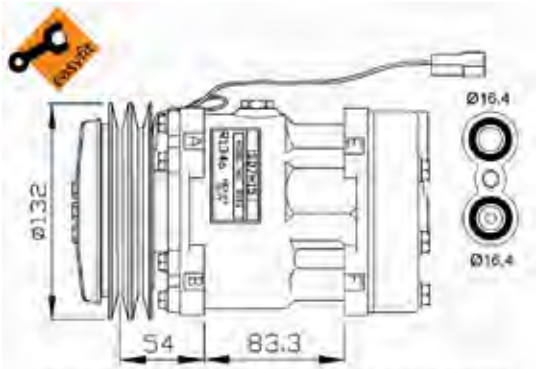

SD7H15 (MODEL NO. 7952, 7960, 8056, 8088)
CILINDER HEAD "QC" (OM-PAD)
2A-GROOVE Ø132, 12 VOLT

32274G

NEW HOLLAND

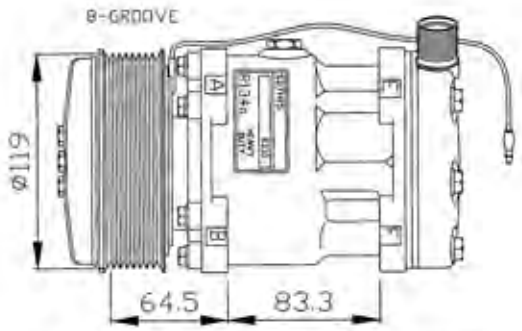

SD7H15-Model 6022, 7865, 7890, 8026, 8028, 8099, 8100
8229, 8230, STANDARD O-RING 3/4"(D) & 7/8"(S)
12 VOLT, DUST COVER, CYL. HEAD "JE"

32142G

NEW HOLLAND

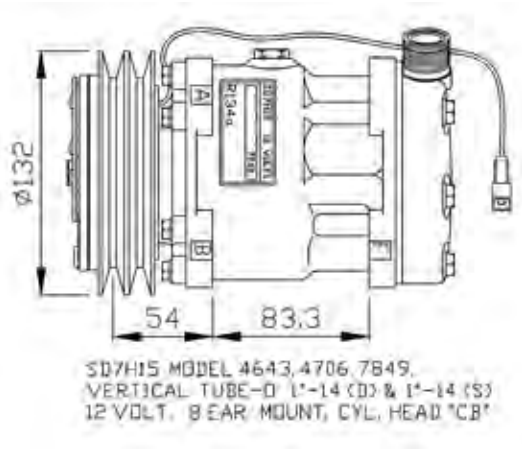

32130+G

RENAULT AGRI

32599G

RENAULT AGRI

32600G

RENAULT AGRI

32601G

RENAULT AGRI **NEW**

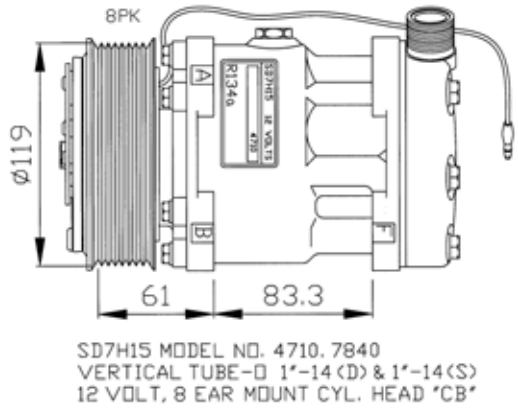

32132+G

RENAULT AGRI **NEW**

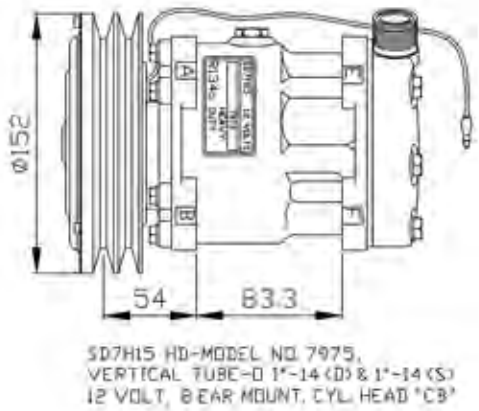

32814G

VOLVO **NEW**

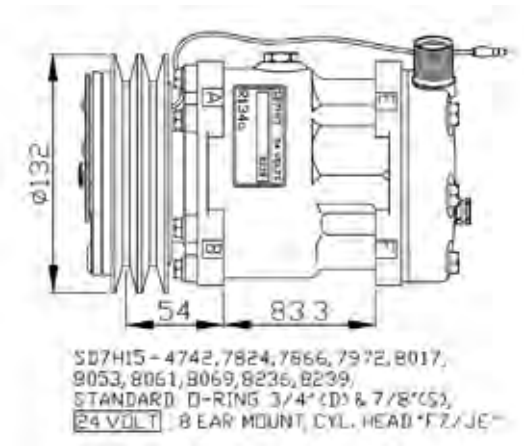

32769G

VOLVO **NEW**

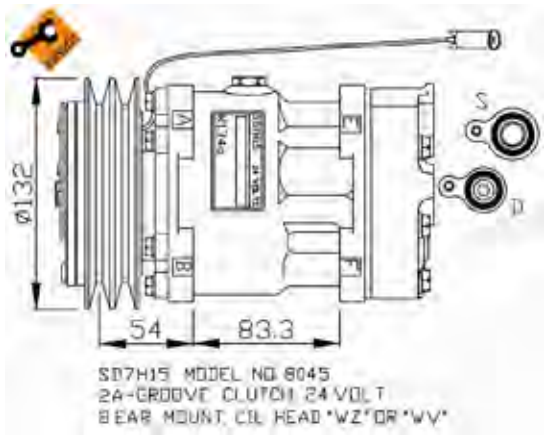

32469G

Evaporators / Verdampers / Verdampfer / Evaporateurs / Evaporadores / Evaporadores / Evaporatori / Parowniki / Испарители

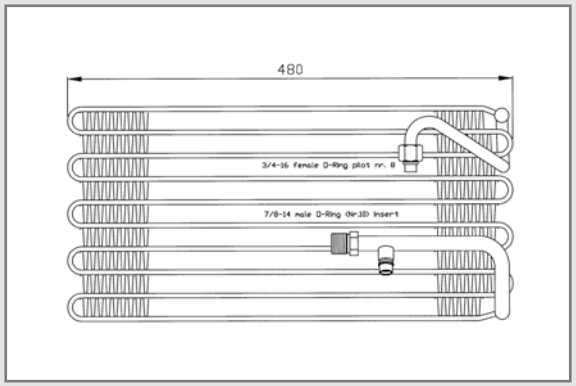

5. Evaporators

Verdampers / Verdampfer / Evaporateurs / Evaporadores / Evaporadores / Evaporatori / Parowniki / Испарители

Make		OE #	A x B x C	NRF #	
CLAAS					
CLAAS	VARIOUS	695081, 695082, 00695082, 00695082	485x130x100	36154	**NEW**
MASSEY FERGUSON					
MASSEY FERGUSON	660, 680, 3050, 3060, 3065, 3075, 3085, A.O.	3902331M91, 3902331M93	625x100x80	36155	**NEW**
VOLVO					
VOLVO	WHEELLOADER D-SERIES 01-03	11007372, 11104083	480x230x85	36105	**NEW**
VOLVO	WHEELLOADER D-SERIES 03-	11412984	480x230x85	36149	**NEW**

CLAAS **NEW**

36154

MASSEY FERGUSON **NEW**

36155

VOLVO **NEW**

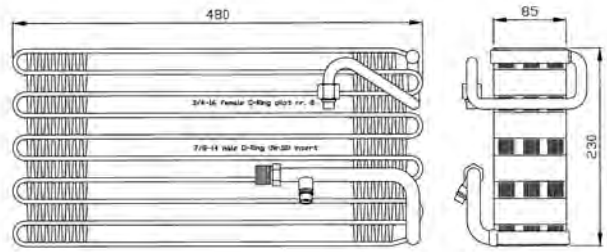

36105

VOLVO **NEW**

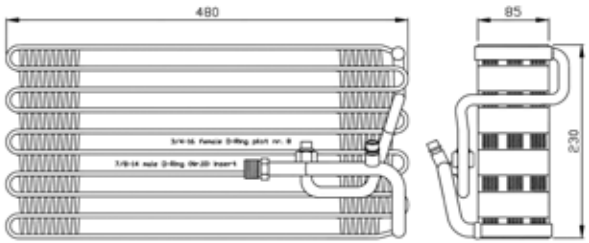

36149

Universal AC parts / Universele AC onderdelen / Universale Klimateile / Universel - Pièces climatisation / Piezas universales de aire acondicionado / Peças universais AC / Ricambi AC universali / Uniwersalne części ac / Универсальные части для кондиционирования

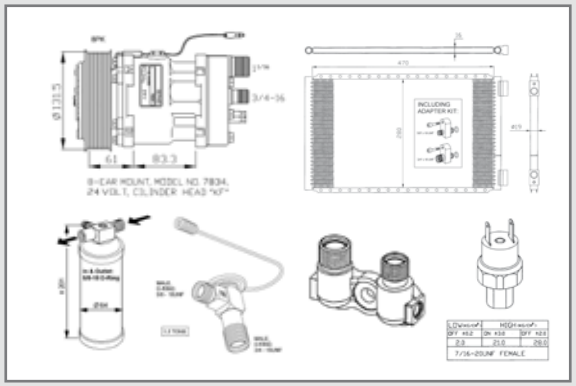

6. Universal AC parts

Universele AC onderdelen / Universale Klimateile / Universel - Pièces climatisation / Peças universais AC / Piezas universales de aire acondicionado / Ricambi AC universali / Uniwersalne części ac / Универсальные части для кондиционирования

Sort	Make / Applications	Manufacturer	Compressor ID	⚠	Grooves	Pulley Ø	Cyl Head ID	Connection	Position	Mount	NRF #	ⓘ
Compressor	UNIVERSAL	GENUINE SANDEN	SD7H15-7834	**24**	8	132	KF	1 1/16” / 3/4”	Horizontal	Ear Mount	32073G	**NEW**
Compressor	UNIVERSAL	GENUINE SANDEN	SD7H15-7849	12	2	132	C/CB	1”x14 / 1”x14	Vertical	Ear Mount	32130G	**NEW**
Compressor	UNIVERSAL	GENUINE SANDEN	SD7H15-8227	12	2	132	KG/GL	7/8” / 3/4”	Horizontal	Ear Mount	32131G	**NEW**
Compressor	UNIVERSAL	GENUINE SANDEN	SD7H15-7850	12	8	119	CB	1”x14 / 1”x14	Vertical	Ear Mount	32132G	**NEW**
Compressor	UNIVERSAL	GENUINE SANDEN	SD7H15-8027	12	8	119	KG/GL	7/8” / 3/4”	Horizontal	Ear Mount	32133G	**NEW**
Compressor	UNIVERSAL	GENUINE SANDEN	SD7H15-7872	**24**	2	125	CB	1”x14 / 1”x14	Vertical	Ear Mount	32134G	**NEW**
Compressor	UNIVERSAL	GENUINE SANDEN	SD7H15-8098	**24**	2	132	M/MD	1”x14 / 1”x14	Horizontal	Ear Mount	32135G	**NEW**
Compressor	UNIVERSAL	GENUINE SANDEN	SD7H15-8019	12	2	132	M/MD	1”x14 / 1”x14	Horizontal	Ear Mount	32138G	**NEW**
Compressor	UNIVERSAL	GENUINE SANDEN	SD7H13-7304	12	6	119	JE	7/8” / 3/4”	Vertical	Ear Mount	32140G	**NEW**
Compressor	UNIVERSAL	GENUINE SANDEN	SD7H13-7320	12	8	119	JE	7/8” / 3/4”	Vertical	**Direct Mount**	32141G	**NEW**
Compressor	UNIVERSAL	GENUINE SANDEN	SD7H15-8230	12	8	119	JE	7/8” / 3/4”	Vertical	Ear Mount	32142G	**NEW**
Compressor	UNIVERSAL	GENUINE SELTEC	TM15HD	12	2	135		7/8” / 3/4”	Vertical	Ear Mount	32154G	**NEW**
Compressor	UNIVERSAL	GENUINE SELTEC	TM15HD	12	2	135		1”x14 / 1”x14	Vertical	Ear Mount	32155G	**NEW**
Compressor	UNIVERSAL	GENUINE SELTEC	TM15HD	12	2	135		7/8” / 3/4”	Horizontal	Ear Mount	32156G	**NEW**
Compressor	UNIVERSAL	GENUINE SELTEC	TM15HD	**24**	2	135		7/8” / 3/4”	Vertical	Ear Mount	32157G	**NEW**
Compressor	UNIVERSAL	GENUINE SELTEC	TM15HD	**24**	2	135		7/8” / 3/4”	Horizontal	Ear Mount	32158G	**NEW**
Compressor	UNIVERSAL	GENUINE SELTEC	TM15HD	12	6	119		7/8” / 3/4”	Vertical	Ear Mount	32159G	**NEW**
Compressor	UNIVERSAL	GENUINE SELTEC	TM15HD	12	8	119		7/8” / 3/4”	Vertical	Ear Mount	32160G	**NEW**
Compressor	UNIVERSAL	GENUINE SELTEC	TM15HD	12	6	119		7/8” / 3/4”	Horizontal	Ear Mount	32161G	**NEW**
Compressor	UNIVERSAL	GENUINE SELTEC	TM15HD	12	8	119		7/8” / 3/4”	Horizontal	Ear Mount	32162G	**NEW**
Compressor	UNIVERSAL	GENUINE SELTEC	TM15HD	12	2	135		1”x14 / 1”x14	Horizontal	Ear Mount	32163G	**NEW**
Compressor	UNIVERSAL	GENUINE SANDEN	SD7H15-8018	12	2	132	JD/JE	7/8” / 3/4”	Vertical	Ear Mount	32238G	**NEW**
Compressor	UNIVERSAL	GENUINE SANDEN	SD7H15-8088	12	2	132	QC	16,4 /16,4	Horizontal	Ear Mount	32274G	**NEW**
Compressor	UNIVERSAL	GENUINE SANDEN FLX	SD7H15-4434	12	2	132	GV	16,65 /16,4	Horizontal	Ear Mount	32282G*	**NEW**
Compressor	UNIVERSAL	GENUINE SANDEN FLX	SD7H15-4435	**24**	2	132	GV	16,65 /16,4	Horizontal	Ear Mount	32283G*	**NEW**
Compressor	UNIVERSAL	GENUINE SANDEN FLX	SD7H15-4860	12	2	125	GV	16,65 /16,4	Horizontal	Ear Mount	32284G*	**NEW**
Compressor	UNIVERSAL	GENUINE SANDEN FLX	SD7H15-4862	**24**	2	125	GV	16,65 /16,4	Horizontal	Ear Mount	32285G*	**NEW**
Compressor	UNIVERSAL	GENUINE SANDEN FLX	SD7H15-4864	12	8	119	GV	16,65 /16,4	Horizontal	Ear Mount	32286G*	**NEW**
Compressor	UNIVERSAL	GENUINE SANDEN FLX	SD7H15-4866	**24**	8	119	GV	16,65 /16,4	Horizontal	Ear Mount	32287G*	**NEW**

***32282G - 32287G GENUINE SANDEN FLX: Please order out of below adapter connections:**

FLX Adapter	UNIVERSAL	GENUINE SANDEN					To fit GV only	7/8” / 3/4”	Vertical		38453	**NEW**
FLX Adapter	UNIVERSAL	GENUINE SANDEN					To fit GV only	1”-14 / 1”-14	Vertical		38454	**NEW**
FLX Adapter	UNIVERSAL	GENUINE SANDEN					To fit GV only	7/8” / 3/4”	Horizontal		38455	**NEW**
FLX Adapter	UNIVERSAL	GENUINE SANDEN					To fit GV only	1”-14 / 1”-14	Horizontal		38456	**NEW**

Sort	Make / Applications	Manufacturer	Compressor ID	⚠	Grooves	Pulley Ø	Cyl Head ID	Connection	Position	Mount	NRF #	ⓘ
Compressor	UNIVERSAL	GENUINE SANDEN	SD7H15-6008	**24**	8	119	FZ	7/8” / 3/4”	Vertical	Ear Mount	32706G	**NEW**
Compressor	UNIVERSAL	GENUINE SANDEN	SD7H15-6012	**24**	8	119	KH	7/8” / 3/4”	Horizontal	Ear Mount	32707G	**NEW**
Compressor	UNIVERSAL	GENUINE SANDEN	SD7H15-6011	**24**	2	132	KH	7/8” / 3/4”	Horizontal	Ear Mount	32708G	**NEW**
Compressor	UNIVERSAL	GENUINE SANDEN	SD7H15-4609	12	2	152	MD	1”-14 / 1”-14	Horizontal	Ear Mount	32756G	**NEW**
Compressor	UNIVERSAL	GENUINE SANDEN	SD7H15-4646	12	2	132	MJ/MB	1”-14 / 1”-14	Horizontal	Ear Mount	32757G	**NEW**
Compressor	UNIVERSAL	GENUINE SANDEN	SD5H14-6631	12	2	132	M/MD	1”-14 / 1”-14	Horizontal	Ear Mount	32760G	**NEW**
Compressor	UNIVERSAL	GENUINE SANDEN	SD5H14-6632	**24**	2	132	M	1”-14 / 1”-14	Horizontal	Ear Mount	32761G	**NEW**
Compressor	UNIVERSAL	GENUINE SANDEN	SD5H14-6642	12	2	132	C	1”-14 / 1”-14	Vertical	Ear Mount	32762G	**NEW**
Compressor	UNIVERSAL	GENUINE SANDEN	SD5H14-6651	12	2	152	FL	7/8” / 3/4”	Vertical	Ear Mount	32763G	**NEW**
Compressor	UNIVERSAL	GENUINE SANDEN	SD5H14-6649	**24**	10	125	FL	7/8” / 3/4”	Vertical	Ear Mount	32764G	**NEW**
Compressor	UNIVERSAL	GENUINE SANDEN	SD7H15-8015	**24**	2	132	MB	1”-14 / 1”-14	Horizontal	Ear Mount	32765G	**NEW**
Compressor	UNIVERSAL	GENUINE SANDEN	SD7H15-8035	12	10	125	JE	7/8” / 3/4”	Vertical	Ear Mount	32766G	**NEW**
Compressor	UNIVERSAL	GENUINE SANDEN	SD7H15-8091	12	2	148	KG	7/8” / 3/4”	Horizontal	Ear Mount	32767G	**NEW**
Compressor	UNIVERSAL	GENUINE SANDEN	SD7H15-8228	12	6	119	KG	7/8” / 3/4”	Horizontal	Ear Mount	32768G	**NEW**
Compressor	UNIVERSAL	GENUINE SANDEN	SD7H15-8239	**24**	2	132	FZ/JE	7/8” / 3/4”	Vertical	Ear Mount	32769G	**NEW**
Compressor	UNIVERSAL	GENUINE SANDEN	SD7H15-8240	**24**	8	119	JE	7/8” / 3/4”	Vertical	Ear Mount	32770G	**NEW**
Compressor	UNIVERSAL	GENUINE SANDEN	SD5H14-6634	**24**	2	132	K	7/8” / 3/4”	Horizontal	Ear Mount	32795G	**NEW**
Compressor	UNIVERSAL	GENUINE SANDEN	SD5H14-6626	12	2	132	FL	7/8” / 3/4”	Vertical	Ear Mount	32798G	**NEW**
Compressor	UNIVERSAL	GENUINE SANDEN	SD5H14-6627	**24**	2	132	FL	7/8” / 3/4”	Vertical	Ear Mount	32799G	**NEW**
Compressor	UNIVERSAL	GENUINE SANDEN	SD5H09-5072	12	2	125	FL	7/8” / 3/4”	Vertical	Ear Mount	32800G	**NEW**
Compressor	UNIVERSAL	GENUINE SANDEN	SD5H14-6630	12	2	132	K	7/8” / 3/4”	Horizontal	Ear Mount	32801G	**NEW**
Compressor	UNIVERSAL	GENUINE SANDEN	SD5H11-6332	12	2	125	C	1”-14 / 1”-14	Vertical	Ear Mount	32802G	**NEW**
Compressor	UNIVERSAL	GENUINE SANDEN	SD5H09-5081	12	2	125	M	1”-14 / 1”-14	Horizontal	Ear Mount	32803G	**NEW**
Compressor	UNIVERSAL	GENUINE SANDEN	SD5H09-5073	**24**	2	125	FL	7/8” / 3/4”	Vertical	Ear Mount	32804G	**NEW**
Compressor	UNIVERSAL	GENUINE SANDEN	SD7H15-7830	12	8	119	MJ/MB	1”-14 / 1”-14	Horizontal	Ear Mount	32805G	**NEW**
Compressor	UNIVERSAL	GENUINE SANDEN	SD5H09-5077	12	2	125	K	7/8” / 3/4”		Ear Mount	32806G	**NEW**
Compressor	UNIVERSAL	GENUINE SANDEN	SD7H15-7975	12	2	152	CB	1”-14 / 1”-14	Vertical	Ear Mount	32814G	**NEW**

Note: Some of the “G” genuine compressors are also available in OE Equivalent Quality!

Sort	Make / Applications		Connection	NRF #		
Condenser	UNIVERSAL 470x280xPF16		3/4” / 5/8”	35950	**NEW**	
Condenser	UNIVERSAL 570x330xPF16		3/4” / 5/8”	35951	**NEW**	
Condenser	UNIVERSAL 440x320xPF16		3/4” / 5/8”	35952	**NEW**	
Condenser	UNIVERSAL 500x320xPF16		3/4” / 5/8”	35953	**NEW**	
Condenser	UNIVERSAL 480x357x22		3/4” / 5/8”	35956	**NEW**	
Receiver Drier	UNIVERSAL		5/8” / 5/8”	33057	**NEW**	
Receiver Drier	UNIVERSAL		5/8” / 5/8”	33059	**NEW**	
Receiver Drier	UNIVERSAL		5/8” / 5/8”	33068	**NEW**	
Receiver Drier	UNIVERSAL		5/8” / 5/8”	33116	**NEW**	
Receiver Drier	UNIVERSAL		5/8” / 5/8”	33226	**NEW**	
Receiver Drier	UNIVERSAL		5/8” / 5/8”	33287	**NEW**	
Receiver Drier	UNIVERSAL		5/8” / 5/8”	33316	**NEW**	
Expansion valve	UNIVERSAL 2 TONS R134A		3/4” / 5/8”	38457	**NEW**	
Expansion valve	UNIVERSAL 1.5 TONS R134A		3/4” / 5/8”	38458	**NEW**	
Pressure switch	UNIVERSAL BINARY	12 & **24**	3/8”-24	38914	**NEW**	
Pressure switch	UNIVERSAL TRINARY	12 & **24**	3/8”-24	38918	**NEW**	
Pressure switch	UNIVERSAL BINARY	12 & **24**	7/16”-20	38919	**NEW**	
Pressure switch	UNIVERSAL TRINARY	12 & **24**	7/16”-20	38920	**NEW**	

UNIVERSAL **NEW**

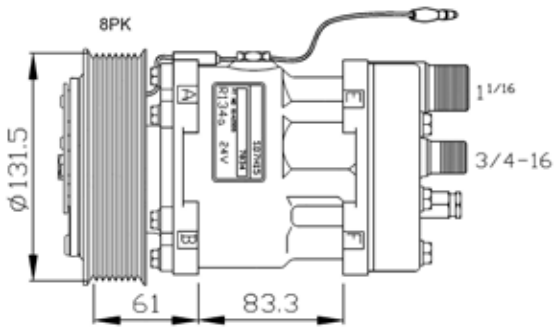

8-EAR MOUNT, MODEL NO. 7834,
24 VOLT, CILINDER HEAD "KF"

32073G

UNIVERSAL **NEW**

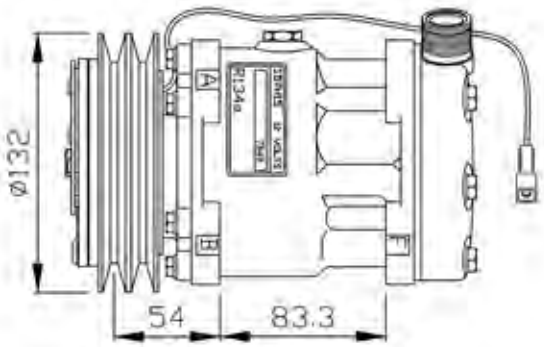

SD7H15 MODEL 4643, 4706, 7849,
VERTICAL TUBE-O 1"-14 (D) & 1"-14 (S)
12 VOLT, 8 EAR MOUNT, CYL. HEAD "CB"

32130G

UNIVERSAL **NEW**

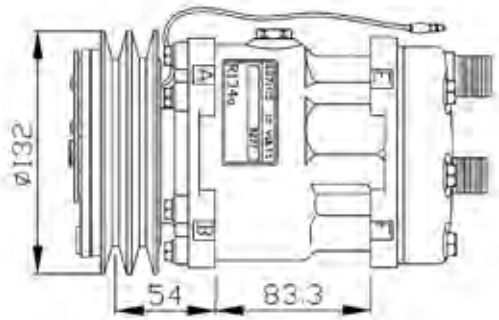

SD7H15 MODEL NO. 4709, 7862, 8023,
8181, 8227, 8241,
HORIZONTAL O-RING 3/4"(D) & 7/8"(S)
12 VOLT, 8 EAR MOUNT, CYL. HEAD "KG/GL"

32131G

UNIVERSAL **NEW**

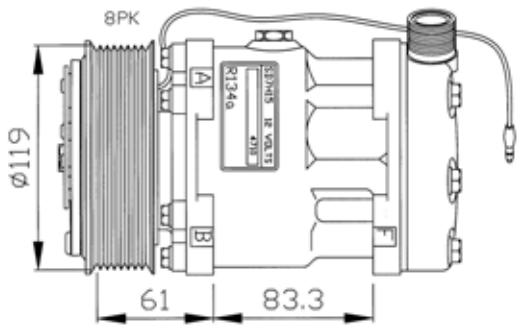

SD7H15 MODEL NO. 4710, 7840
VERTICAL TUBE-O 1"-14 (D) & 1"-14 (S)
12 VOLT, 8 EAR MOUNT CYL. HEAD "CB"

32132G

UNIVERSAL **NEW**

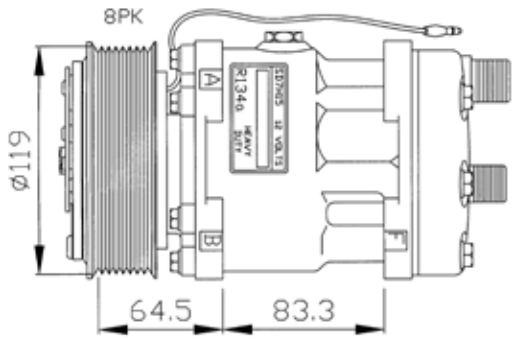

SD7H15 MODEL NO. 7889, 8027
HORIZONTAL O-RING 3/4" (D) & 7/8" (S)
12 VOLT, 8 EAR MOUNT, CYL. HEAD "KG/GL"

32133G

UNIVERSAL **NEW**

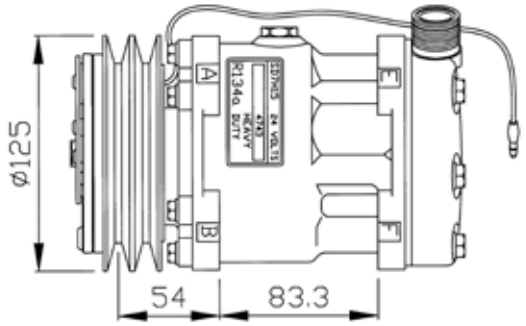

SD7H15 HD-MODEL NO. 4743, 7872
VERTICAL TUBE-O 1"-14 (D) & 1"-14 (S)
24 VOLT, 8 EAR MOUNT, CYL. HEAD "CB"

32134G

UNIVERSAL **NEW**

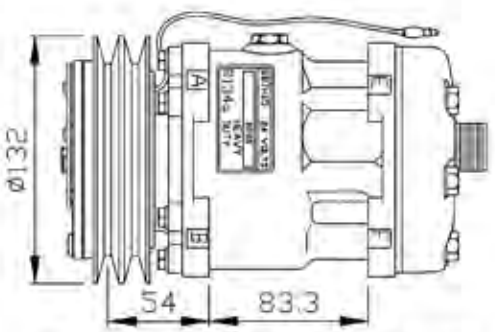

32135G

UNIVERSAL **NEW**

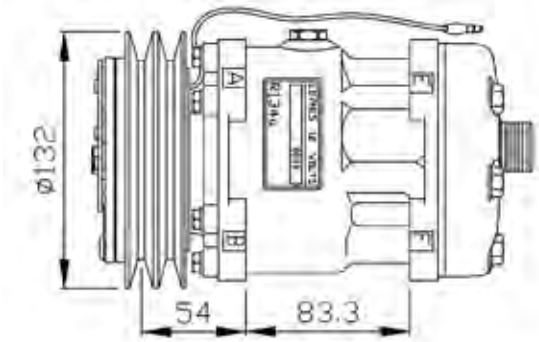

32138G

UNIVERSAL **NEW**

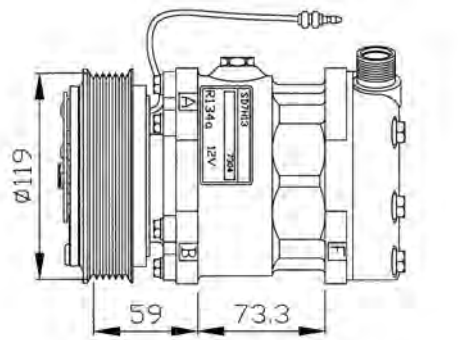

32140G

UNIVERSAL **NEW**

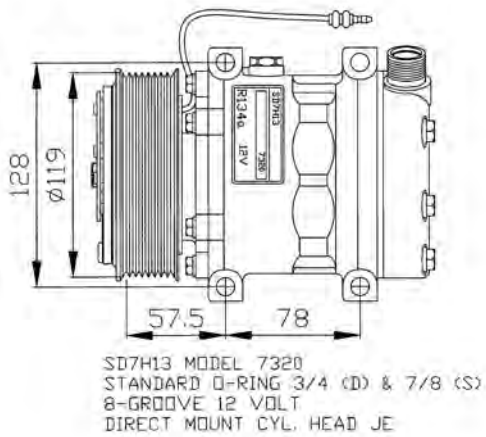

32141G

UNIVERSAL **NEW**

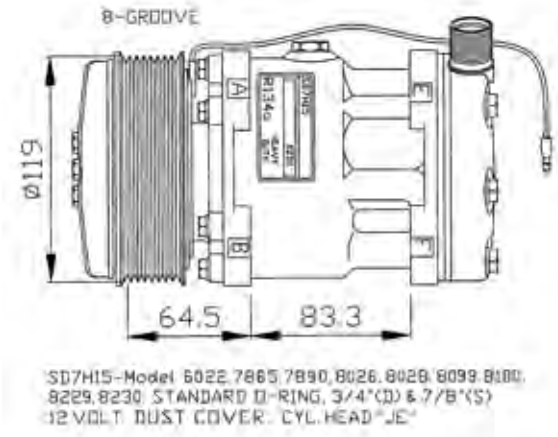

32142G

UNIVERSAL **NEW**

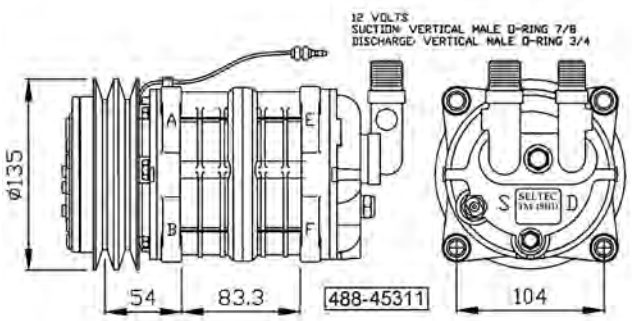

32154G

UNIVERSAL **NEW**

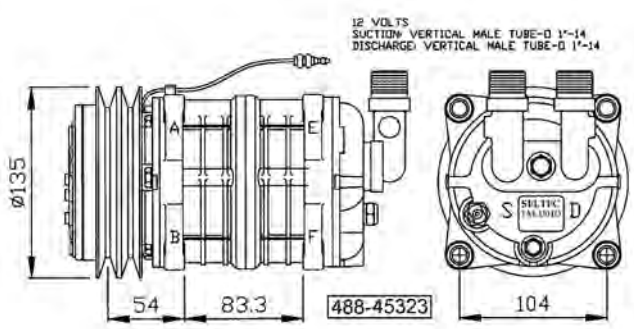

32155G

UNIVERSAL **NEW**

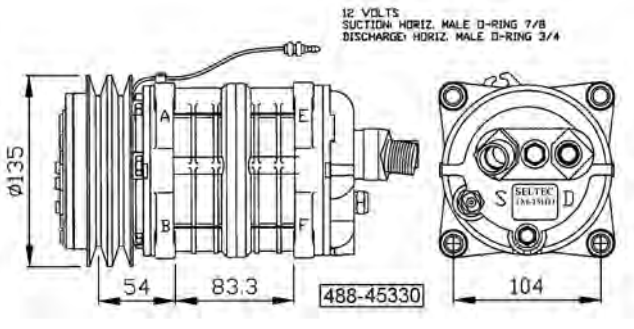

32156G

UNIVERSAL **NEW**

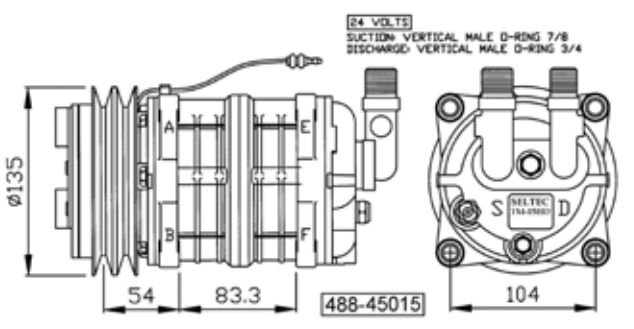

32157G

UNIVERSAL **NEW**

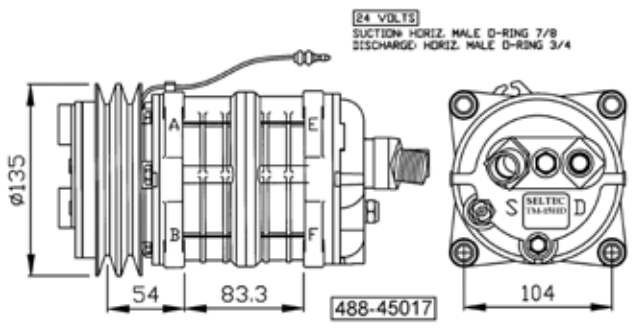

32158G

UNIVERSAL **NEW**

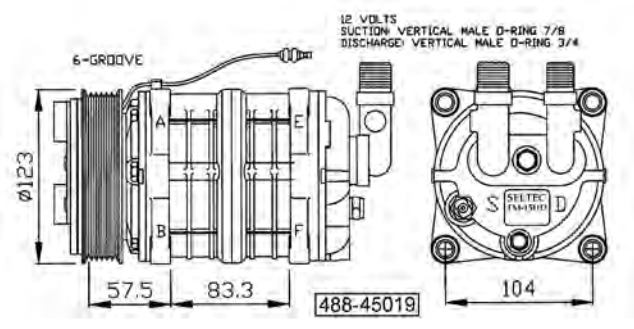

32159G

UNIVERSAL **NEW**

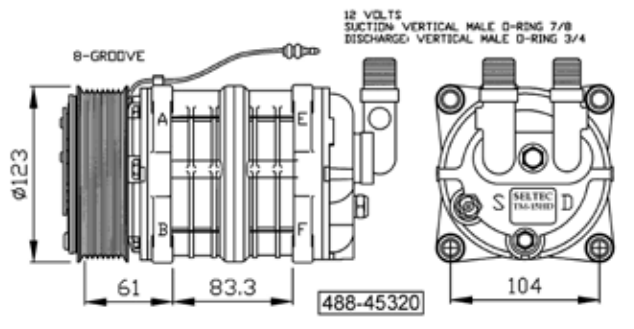

32160G

UNIVERSAL **NEW**

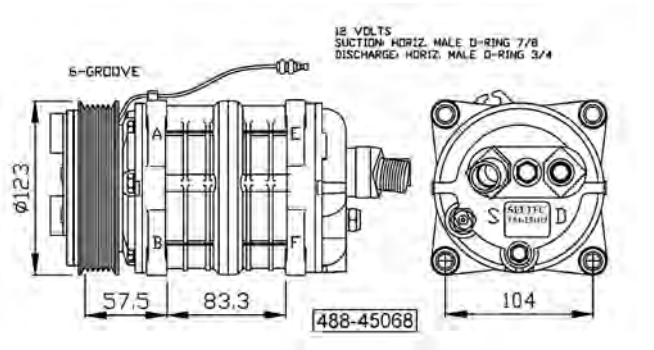

32161G

UNIVERSAL **NEW**

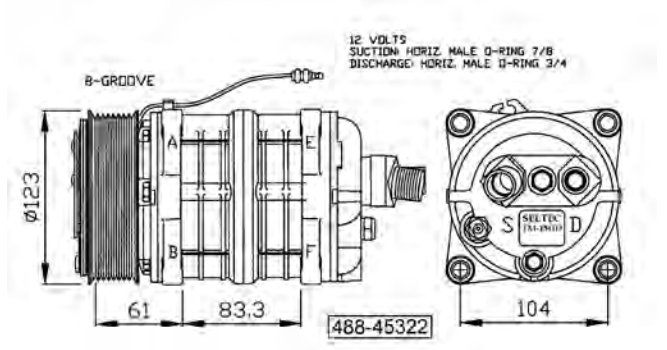

32162G

UNIVERSAL **NEW**

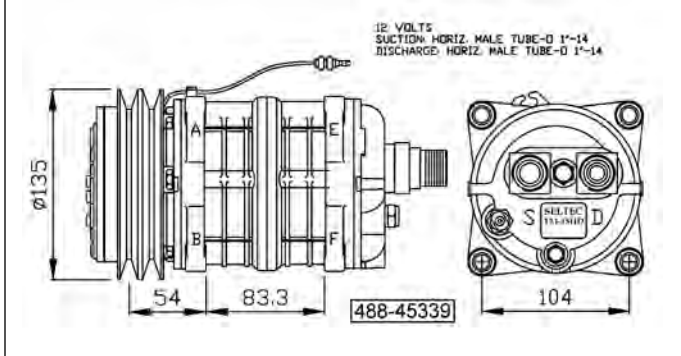

32163G

UNIVERSAL **NEW**

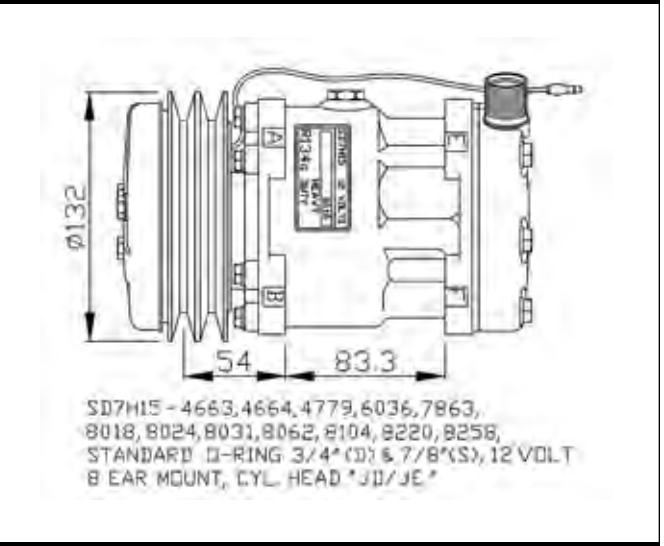

32238G

UNIVERSAL **NEW**

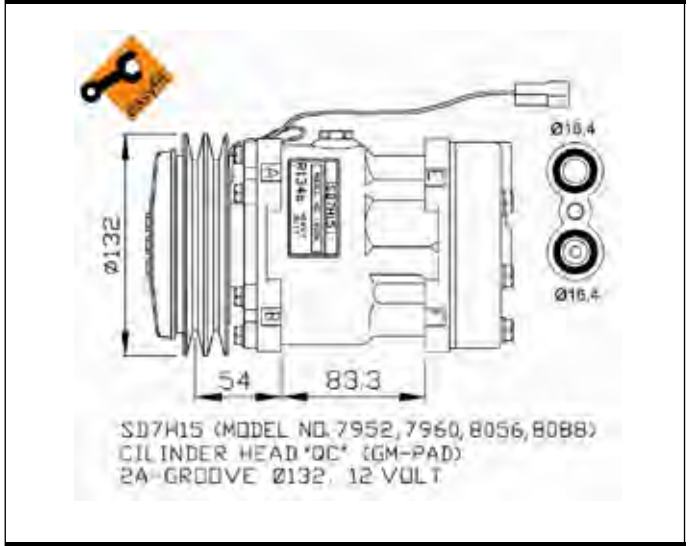

32274G

UNIVERSAL **NEW**

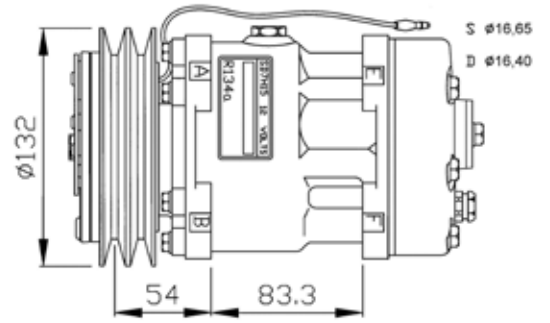

SD7H15 MODEL 4434
*HORIZONTAL GM PAD METRIC
2A-GROOVE Ø132 12VOLT
8 EAR MOUNT CYL. HEAD GV

* ONLY IN COMBINATION WITH ADAPTORS:
- 38453 VERTICAL STANDARD O-RING
- 38454 VERTICAL ROTALOCK TUBE-O
- 38455 HORIZONTAL STANDARD O-RING
- 38456 HORIZONTAL ROTALOCK TUBE-O

32282G*

UNIVERSAL **NEW**

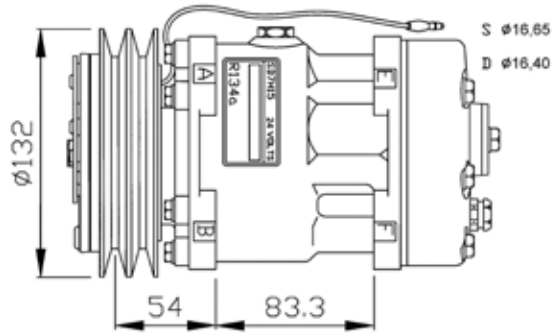

SD7H15 MODEL 4435
*HORIZONTAL GM PAD METRIC
2A-GROOVE Ø132 24VOLT
8 EAR MOUNT CYL. HEAD GV

* ONLY IN COMBINATION WITH ADAPTORS:
- 38453 VERTICAL STANDARD O-RING
- 38454 VERTICAL ROTALOCK TUBE-O
- 38455 HORIZONTAL STANDARD O-RING
- 38456 HORIZONTAL ROTALOCK TUBE-O

32283G*

UNIVERSAL **NEW**

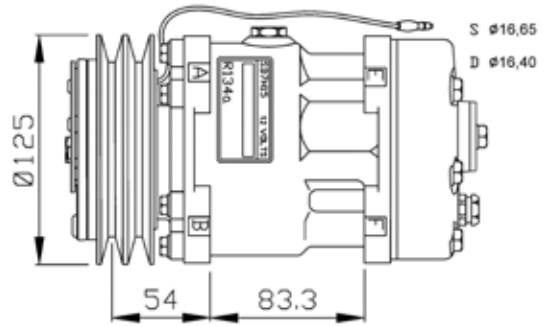

SD7H15 MODEL 4860
*HORIZONTAL GM PAD METRIC
2A-GROOVE Ø125 12VOLT
8 EAR MOUNT CYL. HEAD GV

* ONLY IN COMBINATION WITH ADAPTORS:
- 38453 VERTICAL STANDARD O-RING
- 38454 VERTICAL ROTALOCK TUBE-O
- 38455 HORIZONTAL STANDARD O-RING
- 38456 HORIZONTAL ROTALOCK TUBE-O

32284G*

UNIVERSAL **NEW**

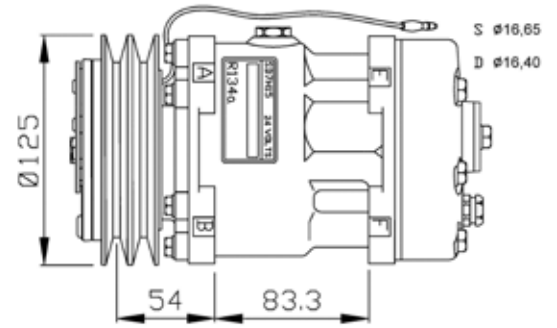

SD7H15 MODEL 4862
*HORIZONTAL GM PAD METRIC
2A-GROOVE Ø125 24VOLT
8 EAR MOUNT CYL. HEAD GV

* ONLY IN COMBINATION WITH ADAPTORS:
- 38453 VERTICAL STANDARD O-RING
- 38454 VERTICAL ROTALOCK TUBE-O
- 38455 HORIZONTAL STANDARD O-RING
- 38456 HORIZONTAL ROTALOCK TUBE-O

32285G*

UNIVERSAL **NEW**

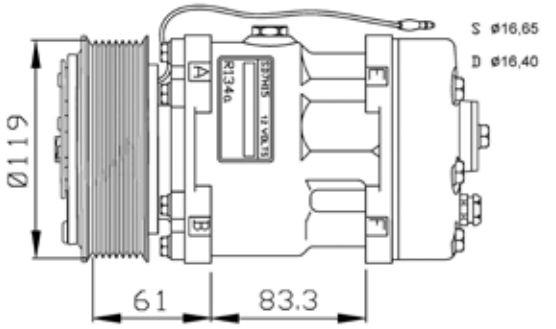

SD7H15 MODEL 4864
*HORIZONTAL GM PAD METRIC
PV8-GROOVE Ø119 12VOLT
8 EAR MOUNT CYL. HEAD GV

* ONLY IN COMBINATION WITH ADAPTORS:
- 38453 VERTICAL STANDARD O-RING
- 38454 VERTICAL ROTALOCK TUBE-O
- 38455 HORIZONTAL STANDARD O-RING
- 38456 HORIZONTAL ROTALOCK TUBE-O

32286G*

UNIVERSAL **NEW**

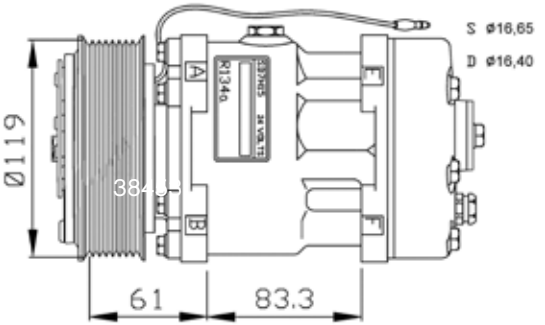

SD7H15 MODEL 4866
*HORIZONTAL GM PAD METRIC
PV8-GROOVE Ø119 24VOLT
8 EAR MOUNT CYL. HEAD GV

* ONLY IN COMBINATION WITH ADAPTORS:
- 38453 VERTICAL STANDARD O-RING
- 38454 VERTICAL ROTALOCK TUBE-O
- 38455 HORIZONTAL STANDARD O-RING
- 38456 HORIZONTAL ROTALOCK TUBE-O

32287G*

UNIVERSAL **NEW**

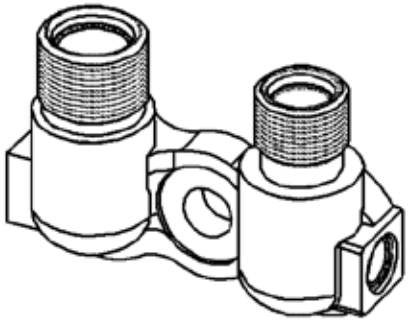

VERTICAL O-RING 3/4 (D) & 7/8 (S)

38453

UNIVERSAL **NEW**

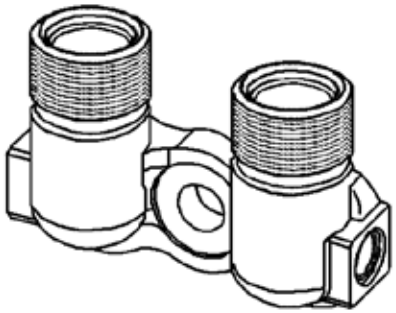

VERTICAL TUBE-O 1'-14 (D)&(S)

38454

UNIVERSAL **NEW**

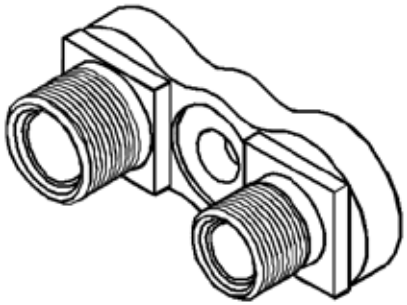

HORIZONTAL O-RING 3/4 (D) & 7/8 (S)

38455

UNIVERSAL **NEW**

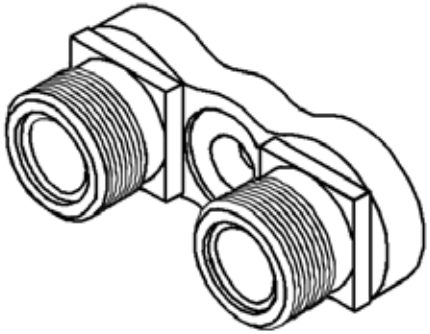

HORIZONTAL TUBE-O 1'-14 (D)&(S)

38456

UNIVERSAL **NEW**

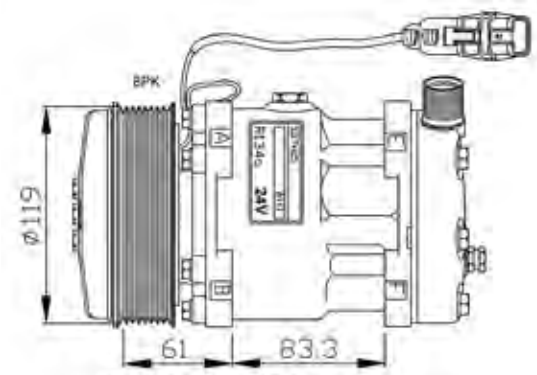

32706G

UNIVERSAL **NEW**

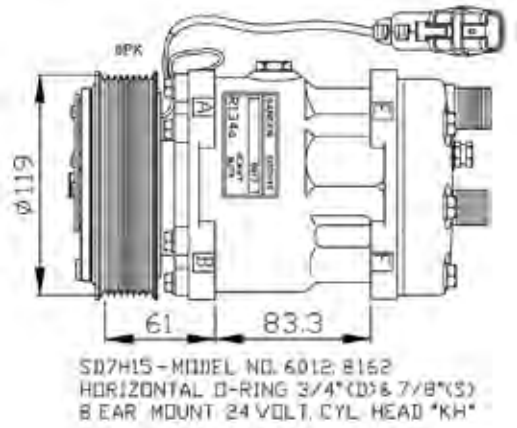

32707G

UNIVERSAL **NEW**

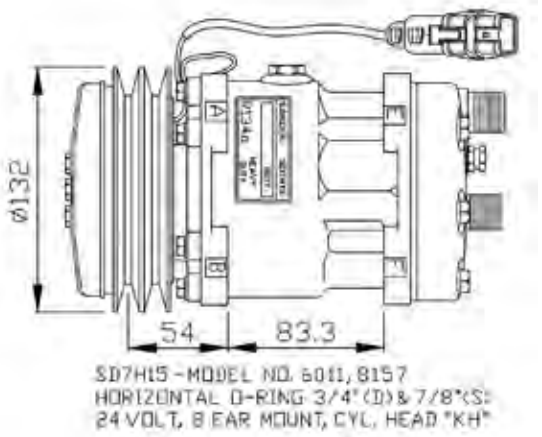

32708G

UNIVERSAL **NEW**

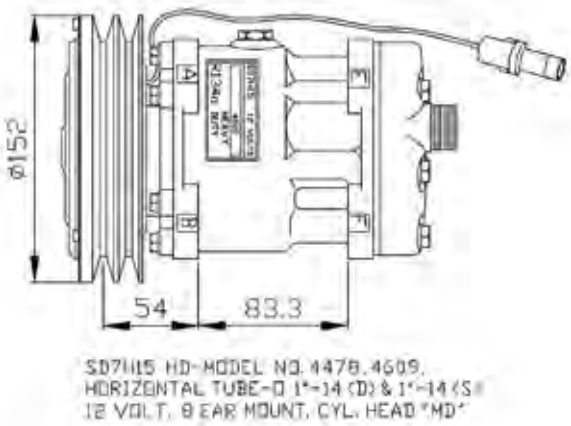

32756G

UNIVERSAL **NEW**

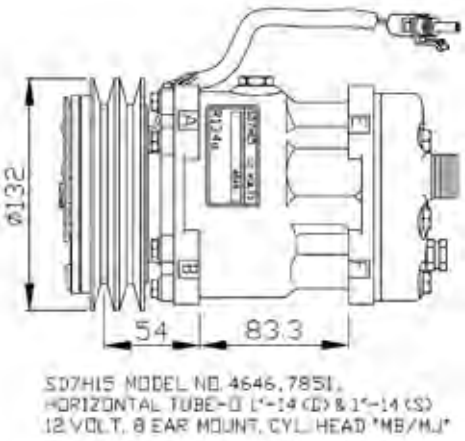

32757G

UNIVERSAL **NEW**

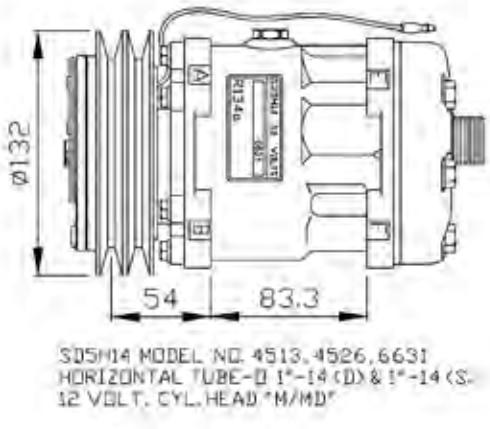

32760G

UNIVERSAL **NEW**

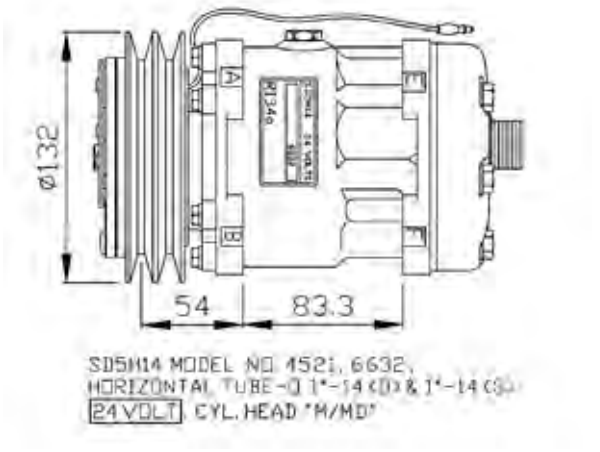

32761G

UNIVERSAL **NEW**

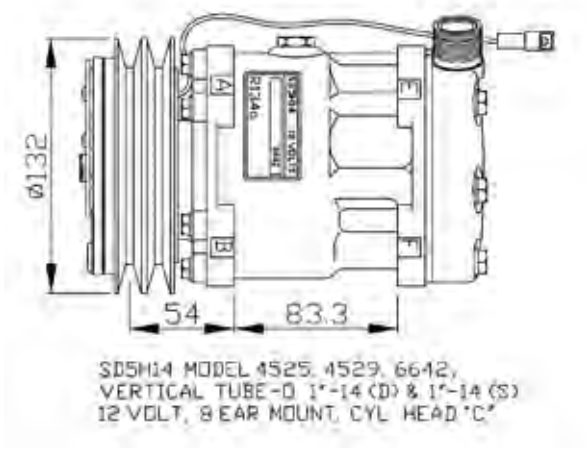

32762G

UNIVERSAL **NEW**

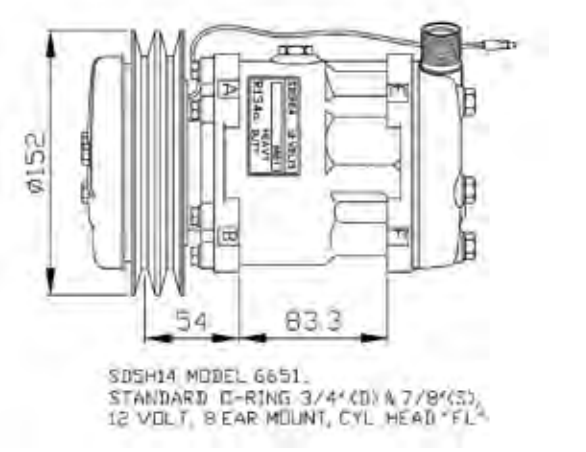

32763G

UNIVERSAL **NEW**

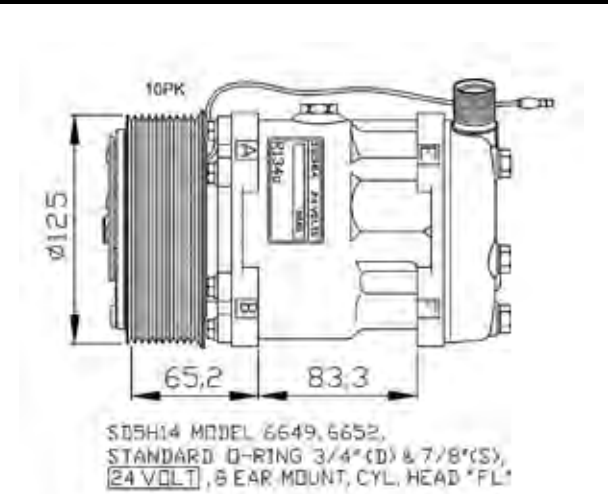

32764G

UNIVERSAL **NEW**

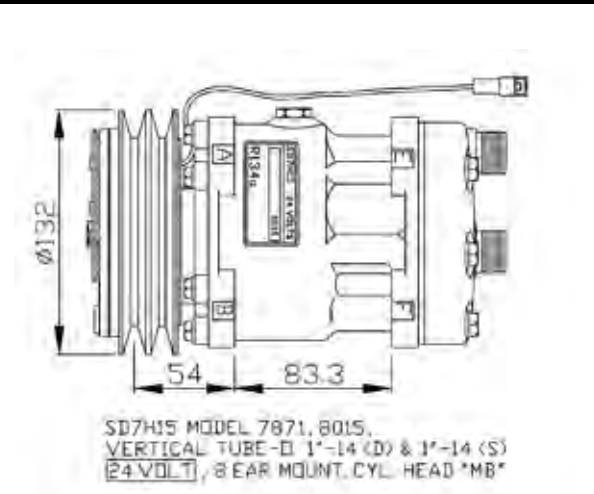

32765G

UNIVERSAL **NEW**

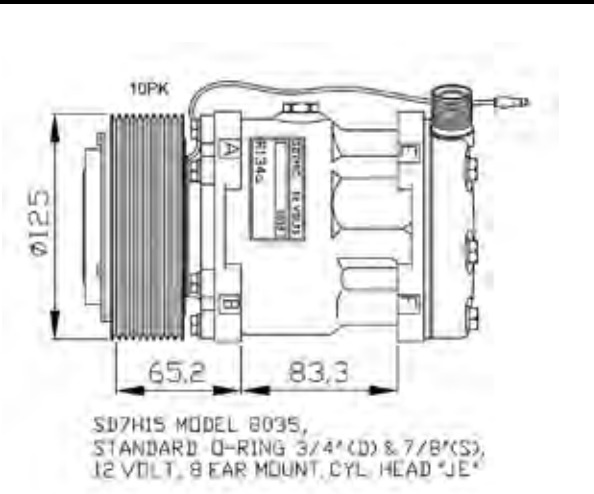

32766G

UNIVERSAL **NEW**

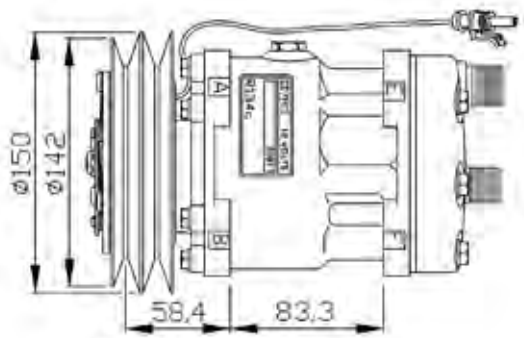

32767G

UNIVERSAL **NEW**

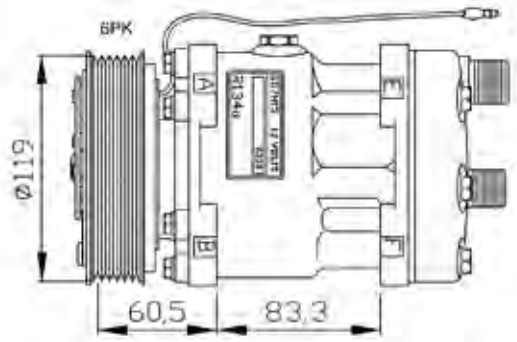

32768G

UNIVERSAL **NEW**

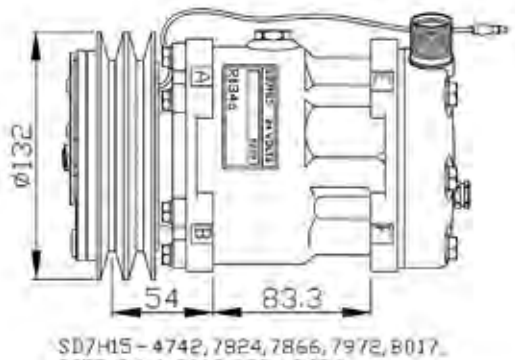

32769G

UNIVERSAL **NEW**

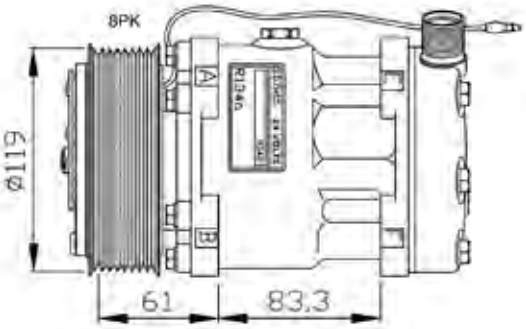

32770G

UNIVERSAL **NEW**

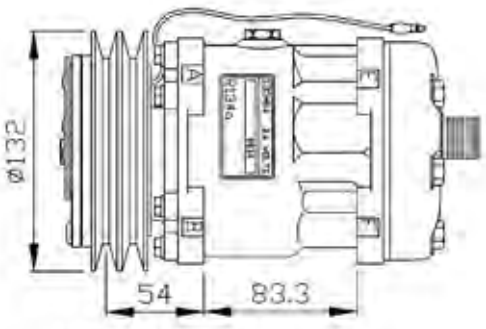

32795G

UNIVERSAL **NEW**

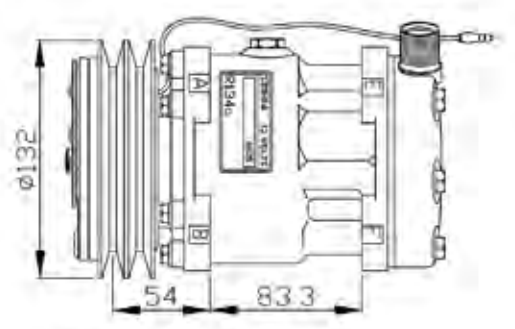

32798G

UNIVERSAL **NEW**

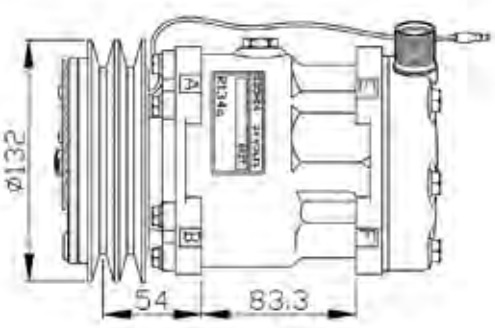

SD5H14 MODEL 4507, 6627, 6665,
STANDARD O-RING 3/4" (D) & 7/8" (S),
24 VOLT, 8 EAR MOUNT, CYL. HEAD "FL"

32799G

UNIVERSAL **NEW**

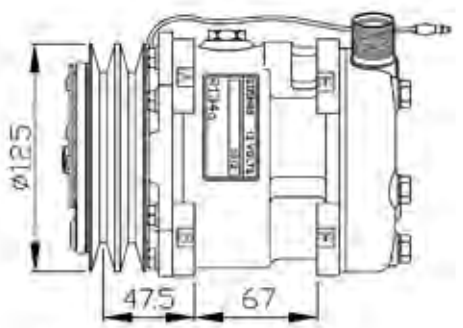

SD5H09 MODEL 5072,
STANDARD O-RING 3/4" (D) & 7/8" (S),
12 VOLT, 8 EAR MOUNT, CYL. HEAD "FL"

32800G

UNIVERSAL **NEW**

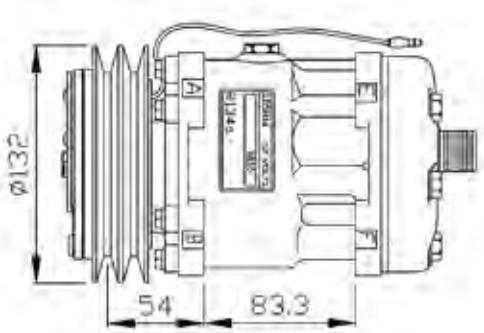

SD5H14 MODEL NO. 6630,
HORIZONTAL O-RING 3/4" (D) & 7/8" (S)
12 VOLT, CYL. HEAD "K"

32801G

UNIVERSAL **NEW**

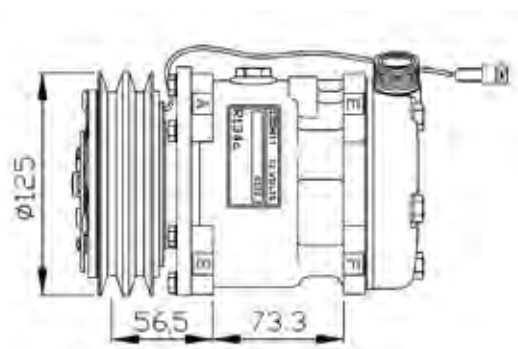

SD5H11 MODEL 6332,
VERTICAL TUBE-O 1"-14 (D) & 1"-14 (S),
12 VOLT, 8 EAR MOUNT, CYL. HEAD "C"

32802G

UNIVERSAL **NEW**

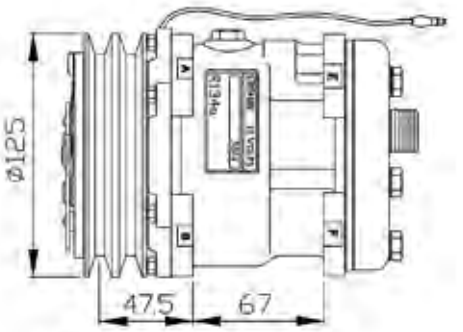

SD5H09 MODEL 5081,
HORIZONTAL TUBE-O 1"-14 (D) & 1"-14 (S),
12 VOLT, 8 EAR MOUNT, CYL. HEAD "M"

32803G

UNIVERSAL **NEW**

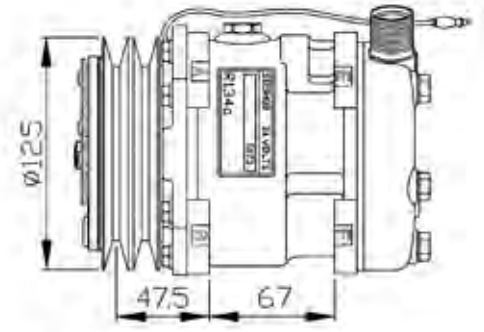

SD5H09 MODEL 5073,
STANDARD O-RING 3/4" (D) & 7/8" (S),
24 VOLT, 8 EAR MOUNT, CYL. HEAD "FL"

32804G

UNIVERSAL **NEW**

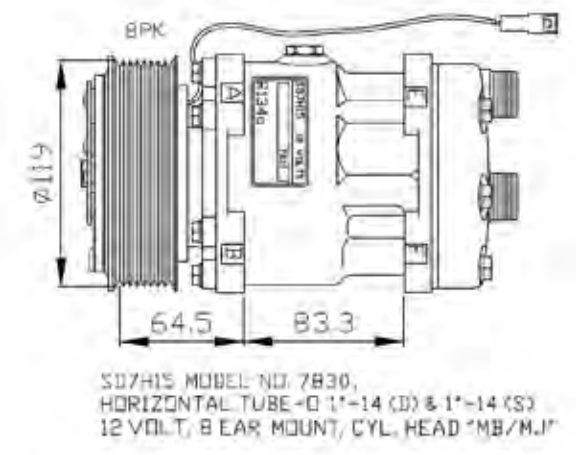

32805G

UNIVERSAL **NEW**

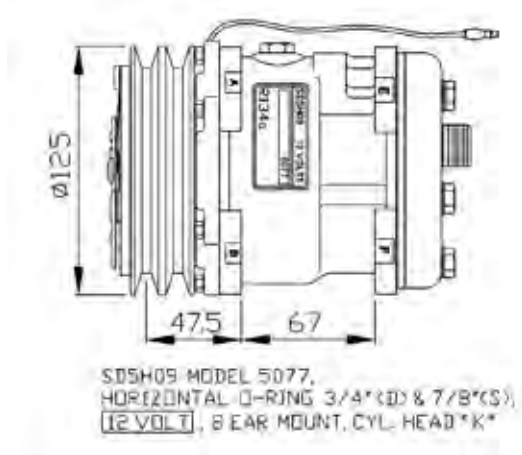

32806G

UNIVERSAL **NEW**

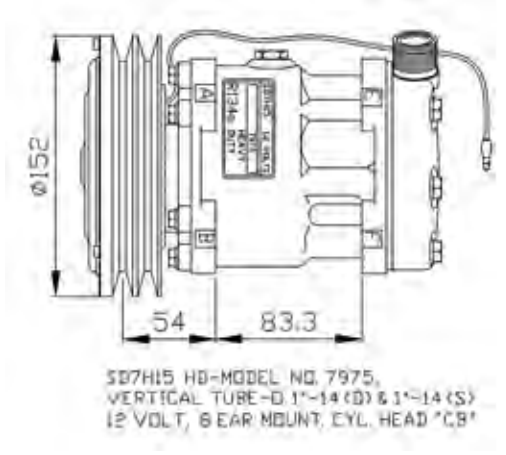

32814G

UNIVERSAL 470x280xPF16 NEW

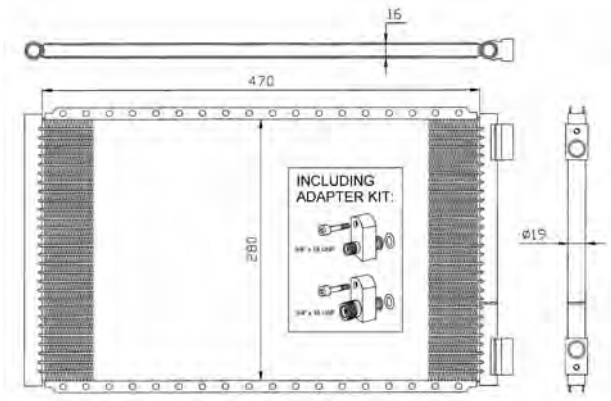

35950

UNIVERSAL 570x330xPF16 NEW

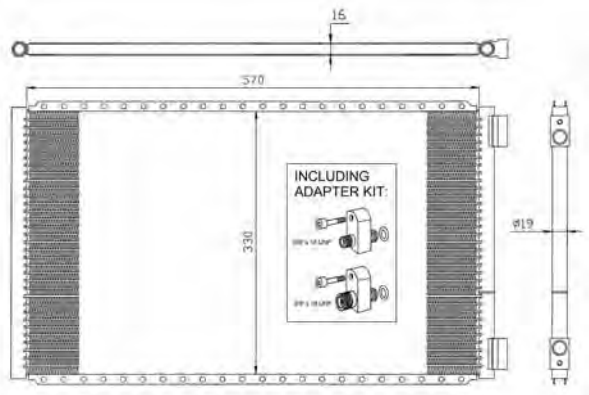

35951

UNIVERSAL 440x320xPF16 NEW

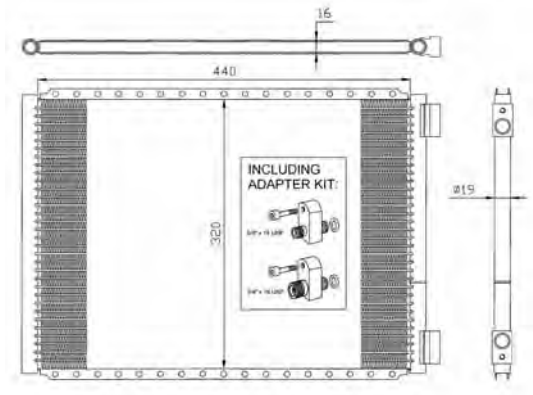

35952

UNIVERSAL 500x320xPF16 NEW

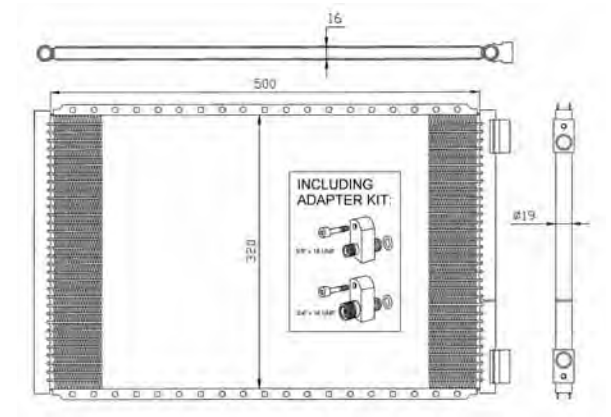

35953

UNIVERSAL 480x357x22 NEW

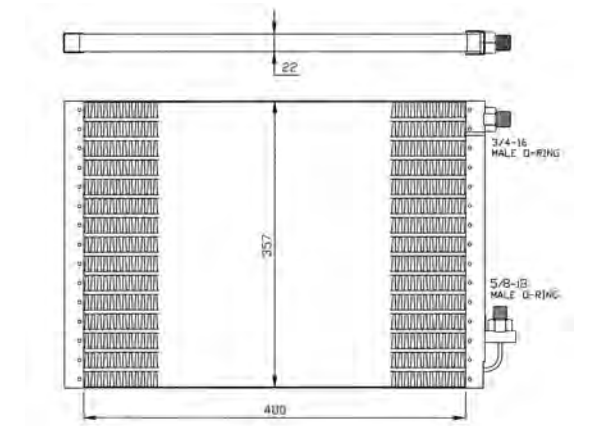

35956

UNIVERSAL **NEW**

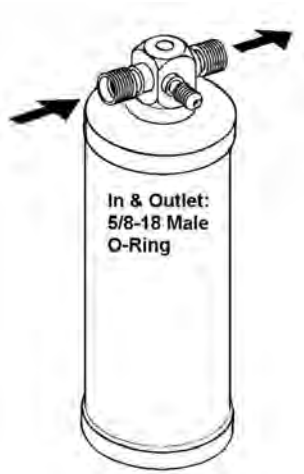

33057

UNIVERSAL **NEW**

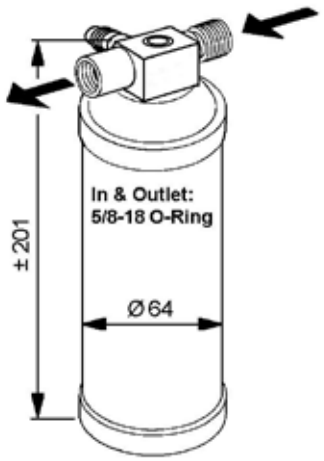

33059

UNIVERSAL **NEW**

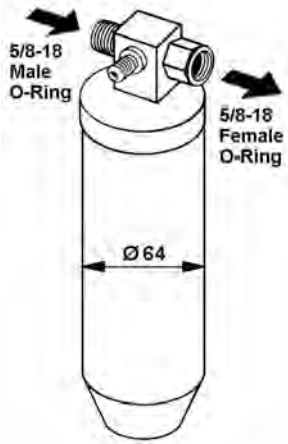

33068

UNIVERSAL **NEW**

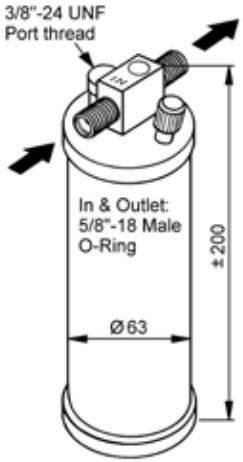

33116

UNIVERSAL **NEW**

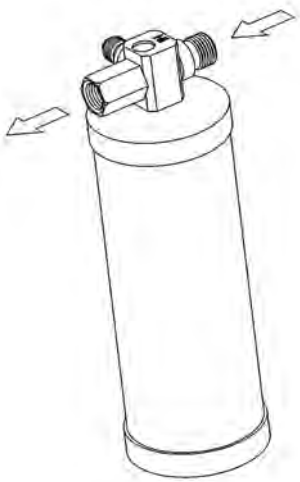

33226

UNIVERSAL **NEW**

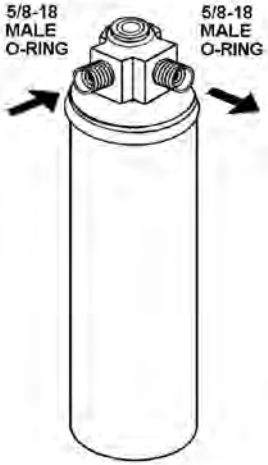

33287

UNIVERSAL **NEW**

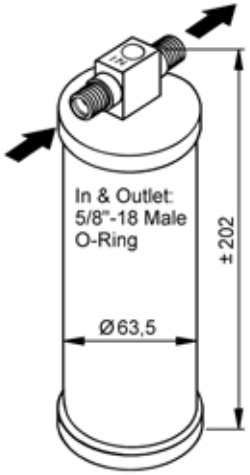

33316

UNIVERSAL 2 TONS R134A **NEW**

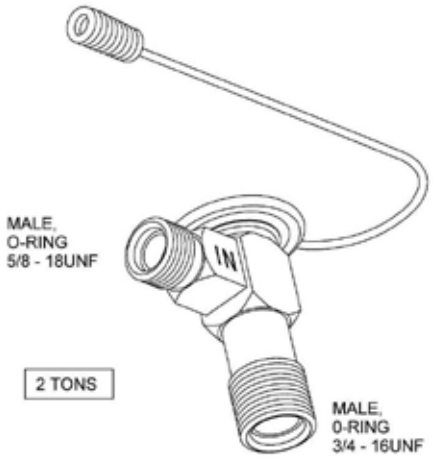

38457

UNIVERSAL 1.5 TONS R134A **NEW**

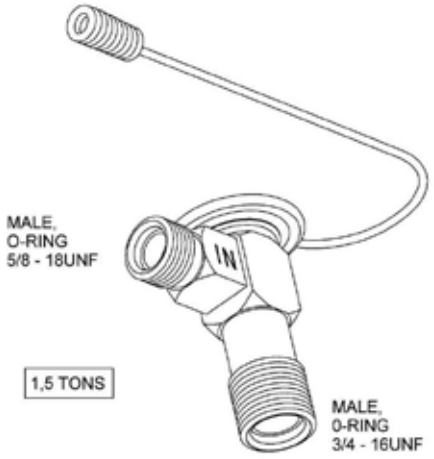

38458

UNIVERSAL BINARY **NEW**

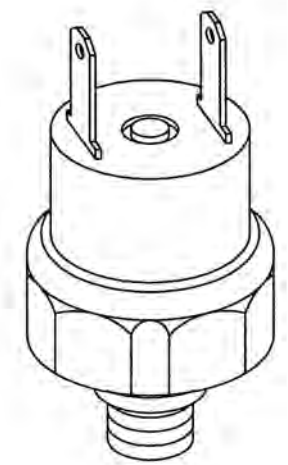

38914

UNIVERSAL TRINARY **NEW**

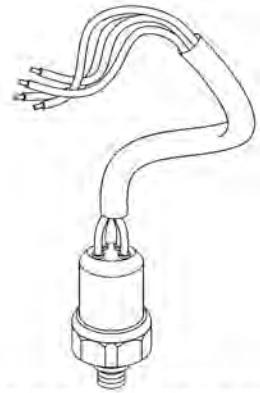

GREEN/BLACK	BLUE/BLACK		GREEN/BLACK	
LOW (KG/CM²)	MID (FAN) (KG/CM²)		HIGH (KG/CM²)	
OFF ±0.2	ON ±1.2	OFF ±1.2	ON ±3.0	OFF ±2.0
2.0	17.0	14.0	20.0	27.0
3/8-24 UNF MALE				

38918

UNIVERSAL BINARY **NEW**

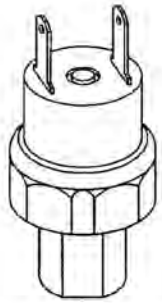

LOW (KG/CM²)	HIGH (KG/CM²)	
OFF ±0.2	ON ±3.0	OFF ±2.0
2.0	21.0	28.0
7/16-20UNF FEMALE		

38919

UNIVERSAL TRINARY **NEW**

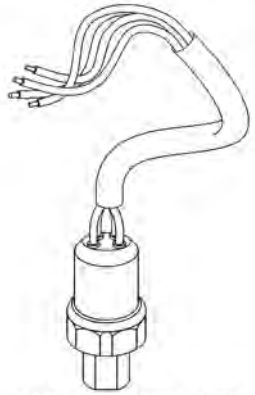

GREEN/BLACK	BLUE/BLACK		GREEN/BLACK	
LOW (KG/CM²)	MID (FAN) (KG/CM²)		HIGH (KG/CM²)	
OFF ±0.2	ON ±1.2	OFF ±1.2	ON ±3.0	OFF ±2.0
2.0	17.0	14.0	20.0	27.0
7/16-20UNF FEMALE				

38920

Xref Sanden-NRF

SANDEN #	NRF #
4434	32282G
4435	32283G
4478	32756G
4498	32758G
4507	32799G
4509	32798G
4513	32760G
4521	32761G
4525	32762G
4526	32760G
4529	32762G
4537	32795G
4604	32281G
4609	32756G
4643	32130G
4646	32757G
4656	32281G
4663	32238G
4664	32238G
4706	32130G
4709	32131G
4710	32132G
4742	32769G
4743	32134G
4744	32135G
4762	32770G
4779	32238G
4806	32758G
4813	32758G

SANDEN #	NRF #
4860	32284G
4862	32285G
4864	32286G
4866	32287G
5072	32800G
5073	32804G
5077	32806G
5081	32803G
5601	32803G
6008	32706G
6011	32708G
6012	32707G
6021	32759G
6022	32142G
6035	32469G
6036	32238G
6067	32238G
6332	32802G
6626	32798G
6627	32799G
6630	32801G
6631	32760G
6632	32761G
6634	32795G
6642	32762G
6649	32764G
6651	32763G
6652	32764G
6664	32798G

SANDEN #	NRF #
6665	32799G
6689	32283G
7304	32140G
7320	32141G
7360	32797G
7410	32132G
7412	32130G
7412	32134G
7548	32132G
7602	32132G
7824	32769G
7825	32238G
7830	32805G
7834	32073G
7840	32132G
7849	32130G
7850	32132G
7851	32757G
7862	32131G
7863	32238G
7865	32142G
7866	32769G
7867	32238G
7871	32765G
7872	32134G
7889	32133G
7890	32142G
7933	32135G
7952	32274G

SANDEN #	NRF #
7960	32274G
7972	32769G
7975	32814G
7982	32708G
8015	32765G
8017	32769G
8018	32238G
8019	32138G
8023	32131G
8024	32238G
8025	32768G
8026	32142G
8027	32133G
8028	32142G
8031	32238G
8035	32766G
8045	32469G
8053	32769G
8056	32274G
8061	32769G
8062	32238G
8064	32281G
8069	32769G
8086	32770G
8088	32274G
8091	32767G
8098	32135G
8099	32142G
8100	32142G

SANDEN #	NRF #
8103	32142G
8104	32238G
8117	32706G
8139	32770G
8148	32759G
8152	32469G
8157	32708G
8162	32707G
8171	32281G
8177	32130G
8181	32131G
8220	32238G
8227	32131G
8228	32768G
8229	32142G
8230	32142G
8233	32770G
8234	32807G
8236	32769G
8239	32769G
8240	32770G
8241	32131G
8243	32469G
8244	32771G
8258	32238G
8948	32797G

SANDEN COMPRESSOR IDENTIFICATION

Cylinder head identification by the one or two letters moulded on to the head.

Nearly all Sanden compressors can be identified by their model number. The above diagram illustrates the model number. Provide this and we should be able to supply you with any Sanden compressor

SANDEN
Delivering Excellence

NRF is a distributor of Sanden

Notice

+31 (0)485 - 476 476
+34 (0)958 405 030
+43 1259 335 5
+44 (0)1327 300 242
0800-72796
+33 (0)327 211 717
+48 (0)5 834 314 77
+49 (0)2 82296 740
+39 (0)574 643 388
+41 4 477 722 92

art. code 76001381

www.nrf.eu